How to formulate a Test Specification

Kai Heussen

Department of Electrical Engineering
Technical University of Denmark

Oct. 30th, 2017

EU H2020 Programme GA No. 654113

Coordinated Voltage Control

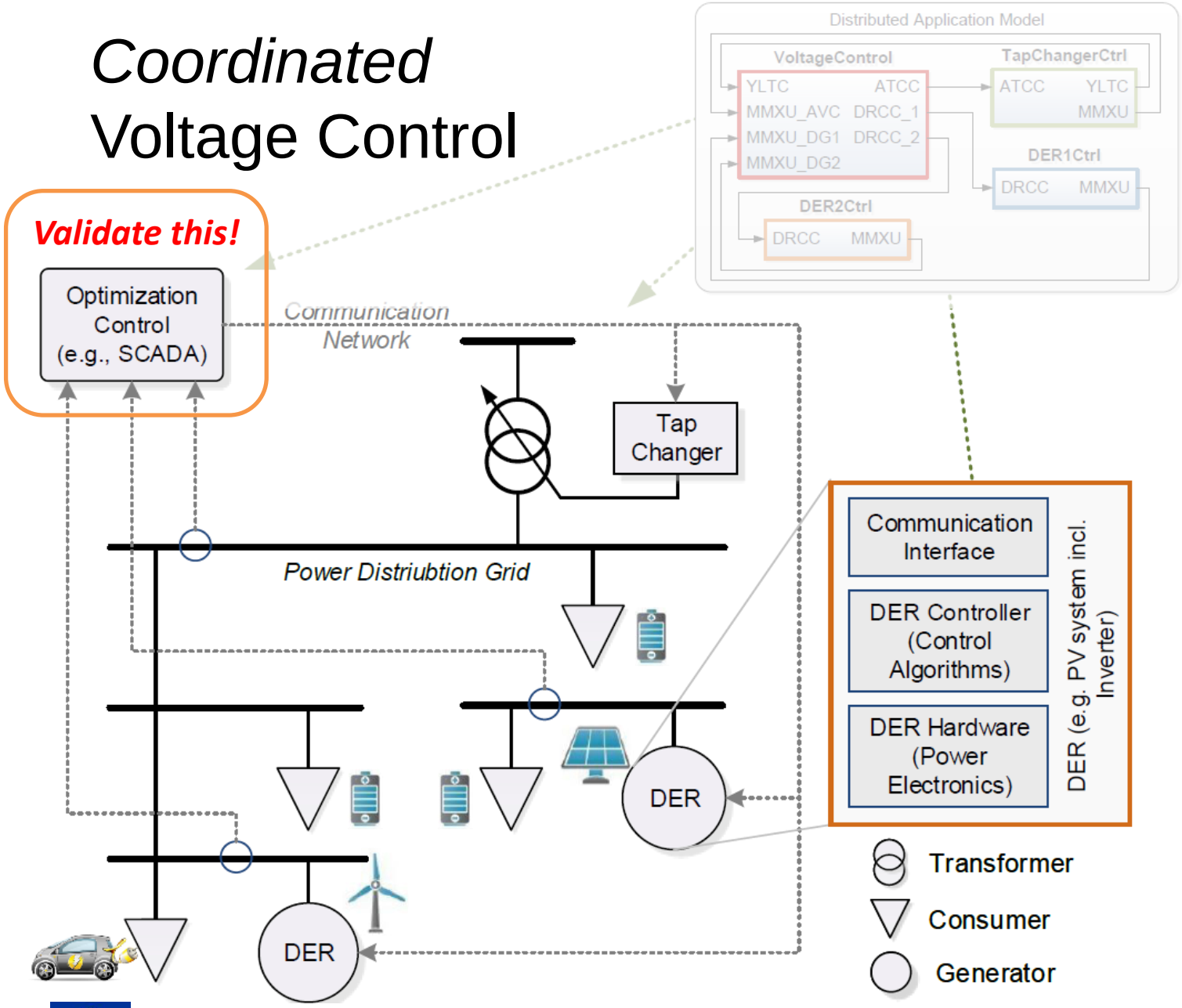

EU H2020 Programme GA No. 654113

What should you be able to do?

”Learning objectives”

Apply the “scenario description method” to interpret a practical test case. i.e.

- Recognise & distinguish *use case* vs. *test case* from title alone; differentiate “functional” from “structural” descriptions/specifications.
- Formulate test objectives in terms of *validation*, *verification* or *characterisation* and formulate *test criteria*
- Identify the *FuT* and *FuI*, *SuT* and *OuI*, in a test specification.
- Distinguish the “System configuration diagrams” to model
  - Generic System Configuration (e.g. for Actors/systems for Use case)
  - Specific “Real-world” System configuration (Test System)
  - Experiment Configuration (Experiment Setup)

EU H2020 Programme GA No. 654113

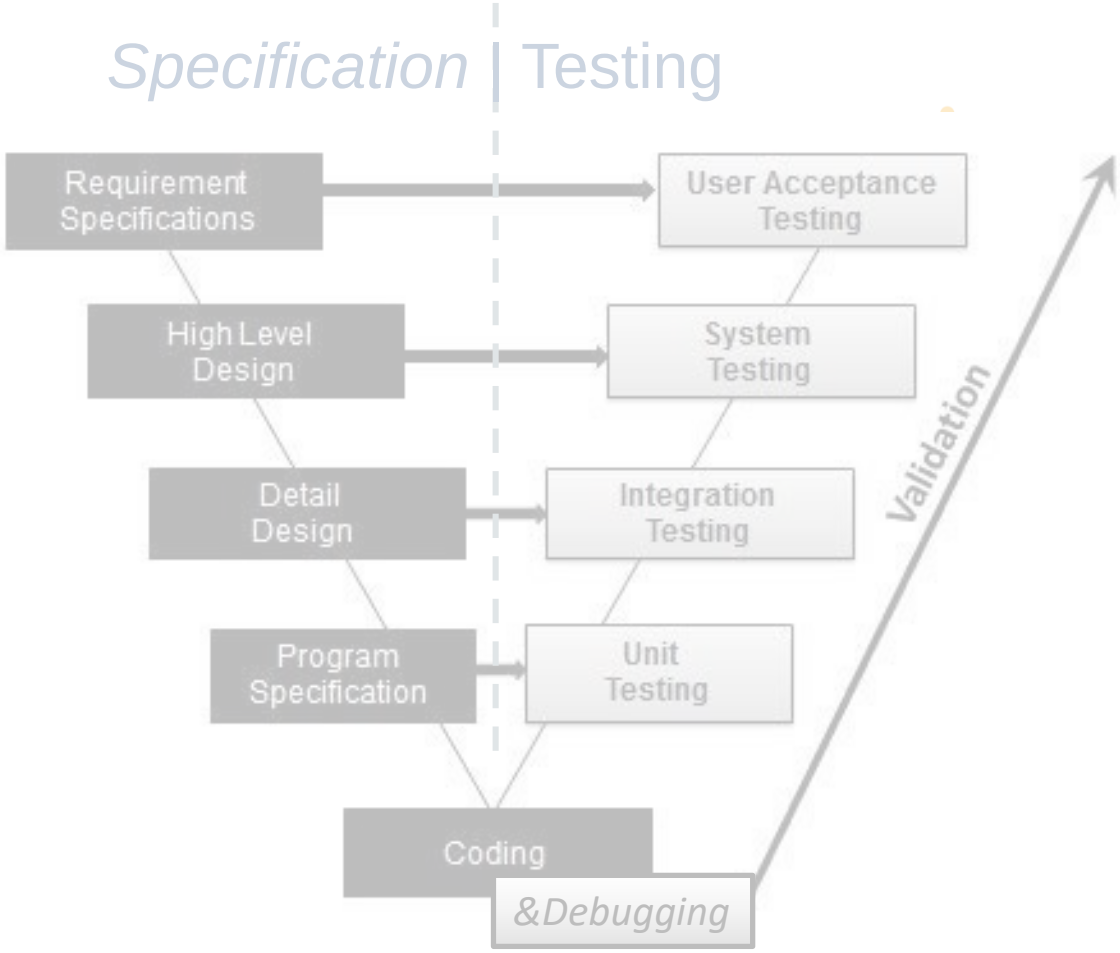

(WHY) (TEST) (SPECIFICATION)?

Definitions required for ”holistic” test specification

- *”well understood” – state of the art*
  - **Use cases**
    - (as top-down approach; w/ SGAM)
    - → Functions, Key Performance Indicators
  - **System Configurations**
    - Power Systems: (OLDs, CIM-based formalizations, IEC 61850 SCL)
    - UML. SysML. OCL. … (in theory)
  - **Testing**
    - ICT Interoperability testing: (compliance, conformance,…)
    - Physical (validation, characterization, ?)
- Specifications require a) *overall process* & b) *clean definitions of concepts*:
  - What is **Holistic testing**? What is a holistic, multi-domain test case?
  - What is a *multi-domain* **system configuration** for holistic test specifications?

Overview

Specification & Use Cases

WHAT IS THE SYSTEM?
WHAT SHOULD THE SYSTEM BE ABLE TO DO?

A smart fortwo car is tested by the insurance industry.

THE TESTING MOTIVE

TEST SPECIFICATION ELEMENTS

Test case, test specification, experiment specification

HOLISTIC TESTING 'STEPS'

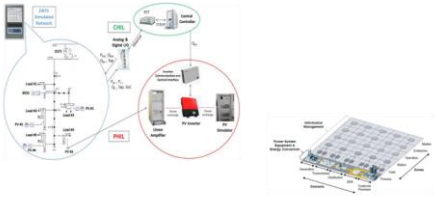

Drawing the 'multi-domain' diagrams

SYSTEM CONFIGURATIONS

Mini-tutorial

APPENDIX:
SC, USE CASE OR TEST CASE?

Specification & Use Cases

WHAT IS THE SYSTEM? WHAT SHOULD THE SYSTEM BE ABLE TO DO?

Form & Function are intuitively related

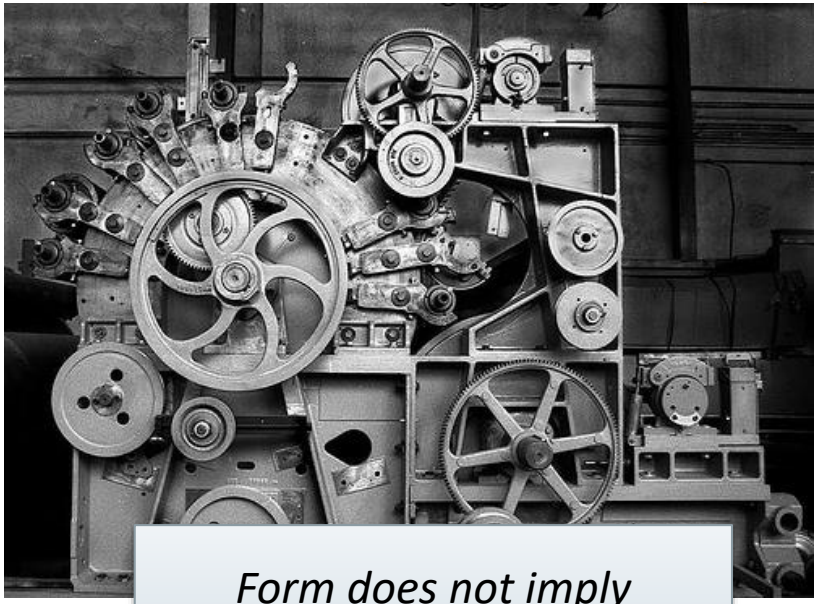

Form does not imply function or purpose
(at least it requires an expert's interpretation)

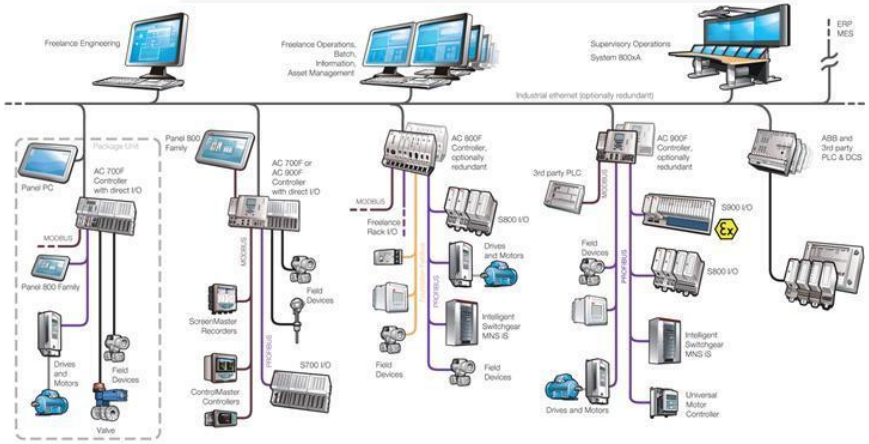

Use Cases

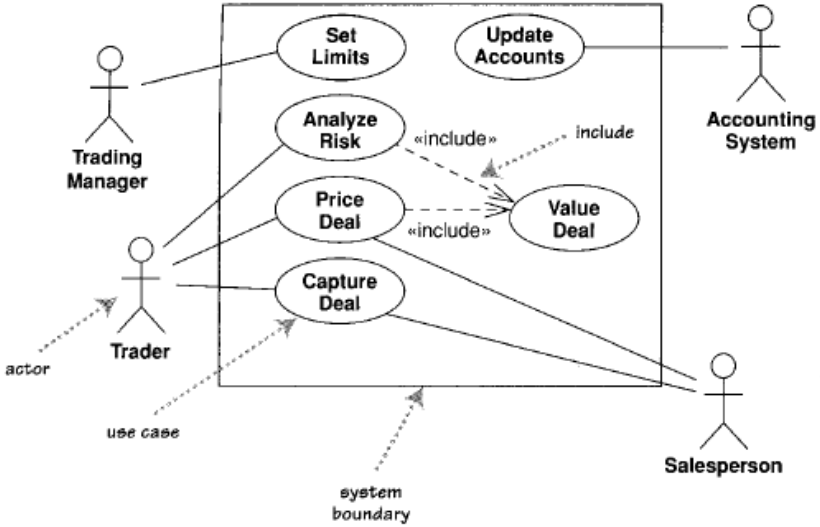

Use Cases formulate:
"what the 'system' is going to do (in relation to others)"

A Use Case specifies:

1. **Actors**, roles (context)
2. **System boundary**
3. System tasks/**functions** as use cases, interactions
4. **Goals** & success **criteria** (KPI)

←Use Case diagram

- Can be at any level of detail:
  - context and system boundary are arbitrary e.g. *business* or *technical*

EU H2020 Programme GA No. 654113

Use Case Diagram

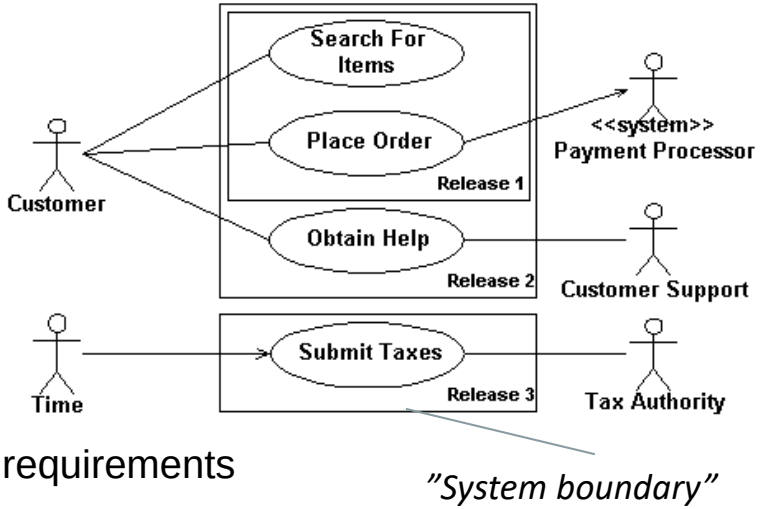

Use cases/functions

- Identifying/Defining system function & requirements
- E.g. purpose of the control function

Systems

- Identified by 'system boundary' in use case diagram
- to be specified by one or several use cases (i.e. not 'Power System', but rather 'Control System')

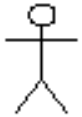

Actors

- A 'soft' concept: anything external ***interacting*** with the "system" of a use case
- E.g. Roles/people; other 'systems'; but also: devices, physical systems etc.
- *Actors* can be abstracted and organized systematically

Note: power systems, operators, devices, other controllers, <u>all are 'Actors'</u> in a use case

Lazy in drawing? Try: http://plantuml.com/use-case-diagram


Fit two people comfortably


DL 51726
Park in a narrow spot

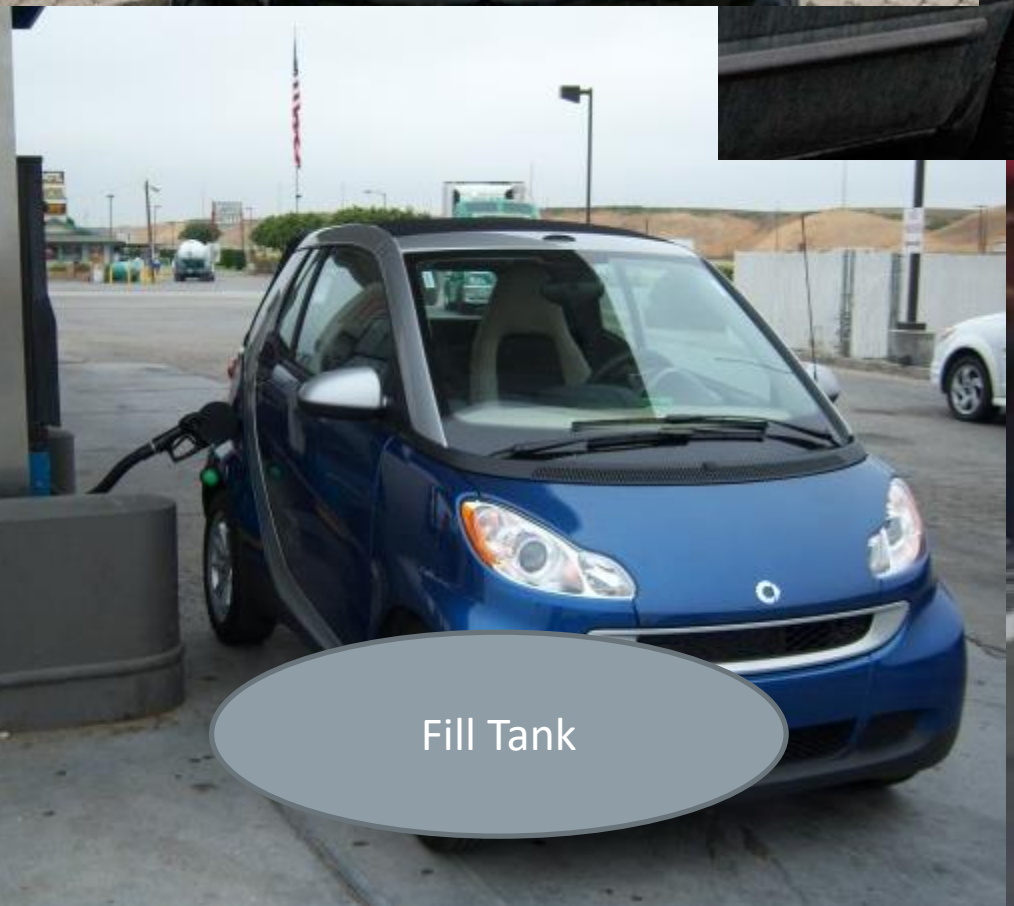
Fill Tank


Drive
Drive in City
Drive from place A to B

What is the System?
What does it do? (functions)
Who are the actors?

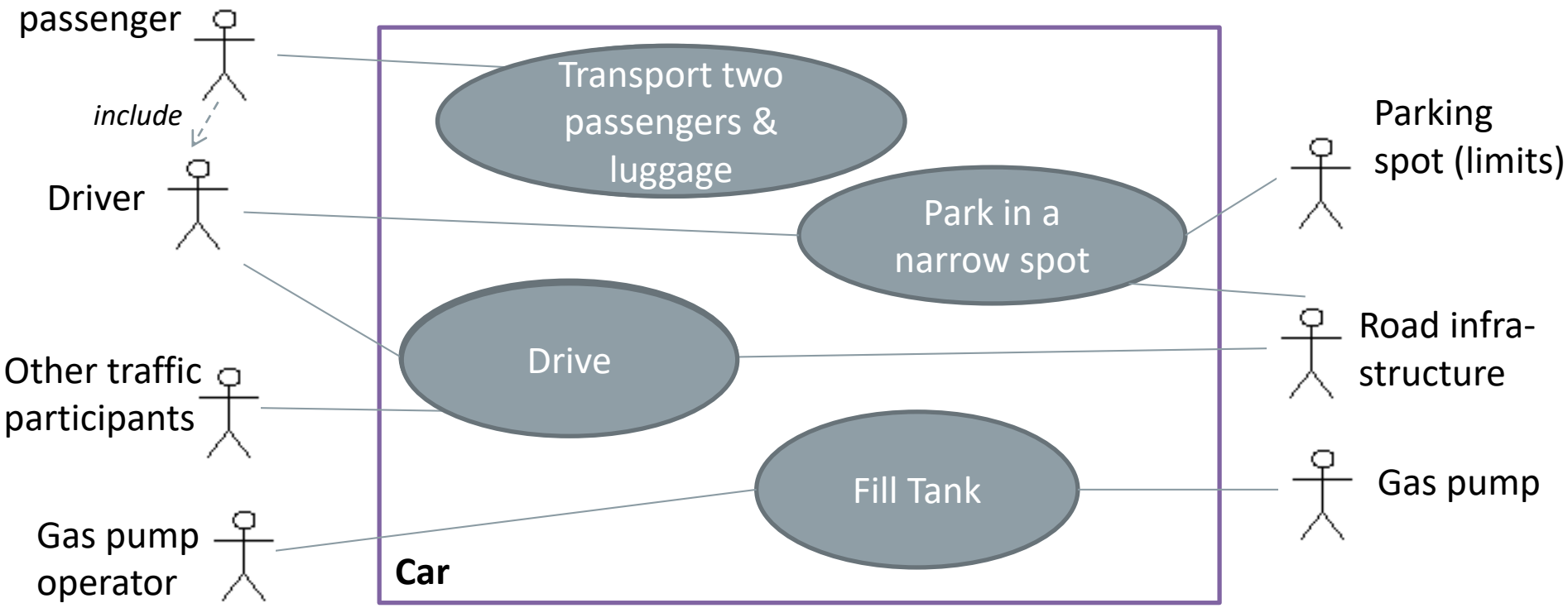

Use cases for
Indoor Temperature Control

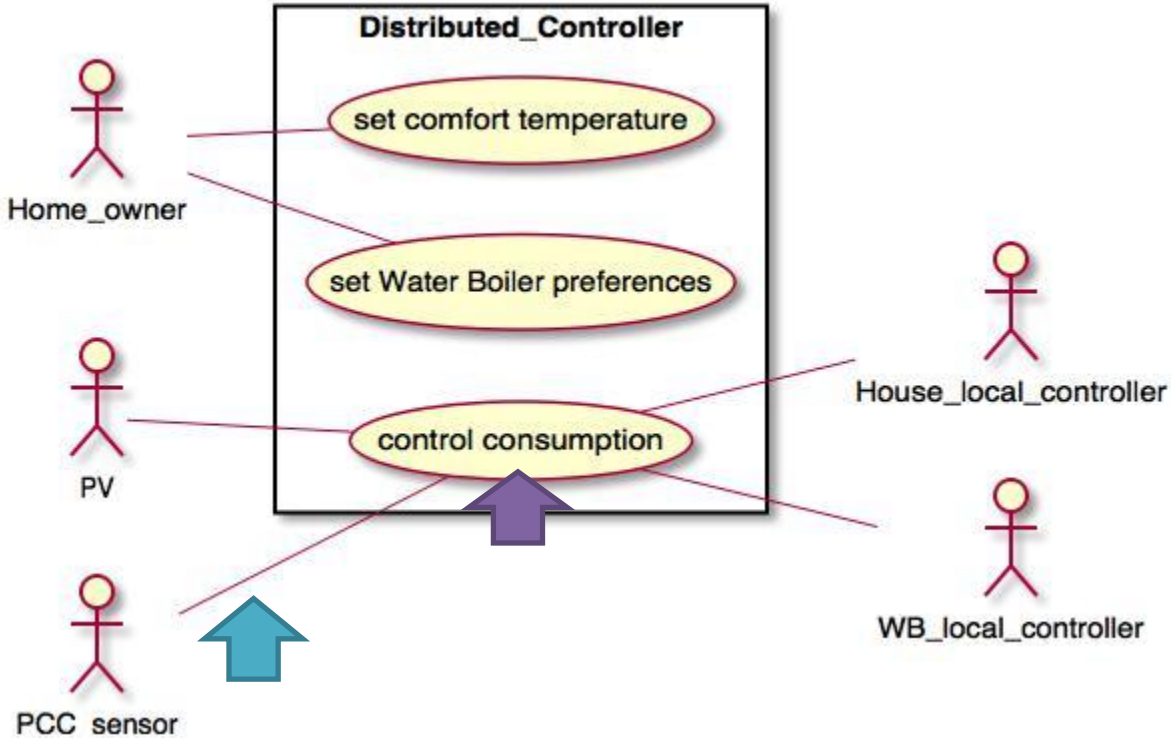

Use case description

IEC62559 standard template

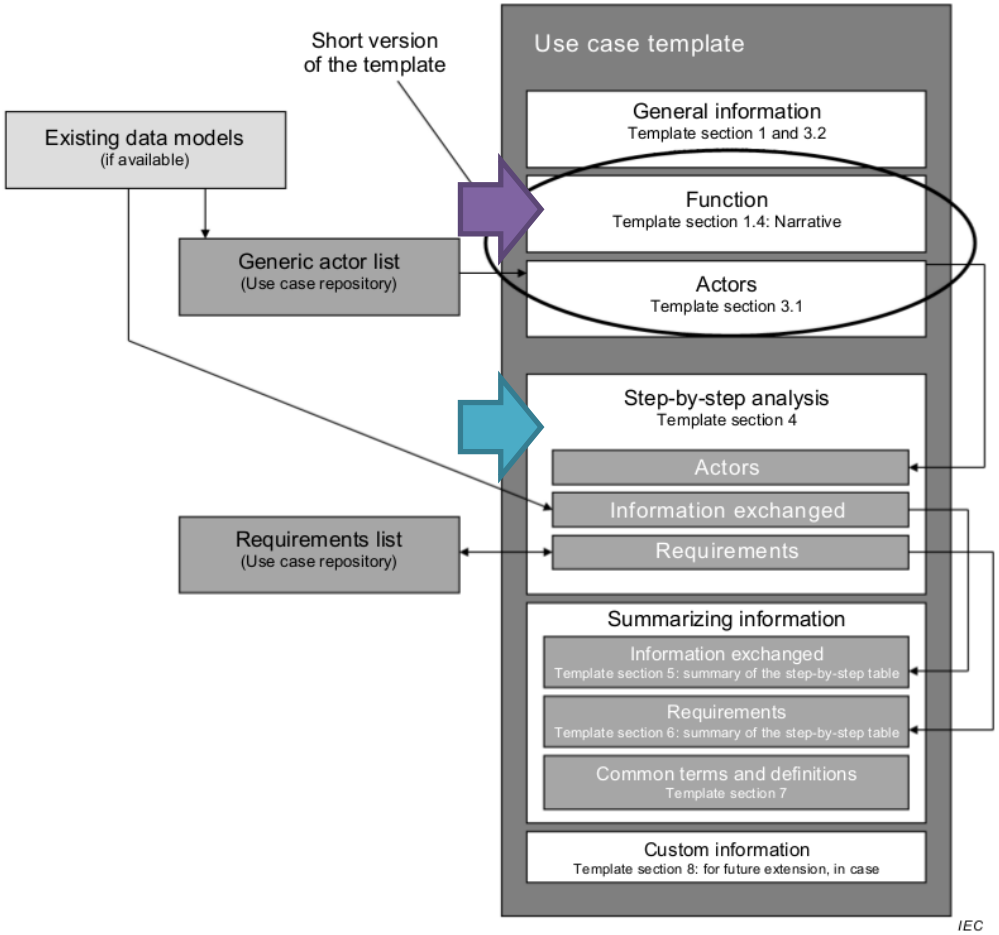

Description of the use case

1.1 Name of use case

Use case identification		
ID	***Area Domain(s)/ Zone(s)***	***Name of use case***
??	Zones: - Domains: Electrical and DER	Optimal centralized coordinated voltage control

1.2 Version management

Version management				
Version No.	***Date***	***Name of author(s)***	***Changes***	***Approval status***
1.0	06-06-2016	Panos Kotsampopoulos	initial setup of the use case	Draft, Work in Progress

1.3 Scope and objectives of use case

Scope and objectives of use case	
Scope	Optimally control the voltages of a distribution network, while simultaneously minimizing power losses and tap change operations of the transformer's on-load tap changer (OLTC). This is accomplished with a central controller that receives real-time measurements from key nodes of the network, solves an optimization problem, and dispatches set-points to controllable devices located in the network, such as the OLTC, inverters of DER units and storage systems.
Objective(s)	O1: Minimize voltage deviations from the nominal value O2: Minimize power losses O3: Minimize tap change operations of the OLTC
Related Higher-level use case(s)	Voltage Control
Control Domain Reference	Distribution network

1.4 Narrative of use case

Narrative of use case
Short description
A central controller receives real-time measurements from key nodes of the distribution grid via a communication network and solves an optimization problem with the aim to minimize voltage deviation from the nominal value, power losses, and tap change operations of the transformer's OLTC. The outputs of the optimization are set-points that are transmitted via the communication network to flexible devices located in the distribution grid, such as the OLTC, inverters of DER units and storage systems.
Complete description
A central controller is installed at substation level and is initialized with all the necessary static data of the network that it will control: network topology, admittance of lines and transformer, nominal power of DER units and storage systems, operating limits of DER units, storage systems and OLTC. While it operates, it requests and receives real-time power measurements from the smart meters of loads and DER units, as well as the state of charge (SOC) of the storage systems and the current

1.5 Key performance indicators (KPI)

Key performance indicators			
ID	***Name***	***Description***	***Reference to mentioned use case objectives***

1.6 Use case conditions

Use case conditions
Assumptions
Prerequisites

1.7 Further information to the use case for classification / mapping

Classification Information

The complete *IEC62559* template.

- Use case diagram
- Sequence diagram

1 Description of the use case

1.1 Name of use case

Use case identification		
ID	Area Domain(s)/ Zone(s)	Name of use case

1.2 Version management

Version management				
Version No.	Date	Name of author(s)	Changes	Approval status

1.3 Scope and objectives of use case

Scope and objectives of use case	
Scope	
Objective(s)	
Related business case(s)	

1.4 Narrative of use case

Narrative of use case
Short description
Complete description

1.5 Key performance indicators (KPI)

Key performance indicators			
ID	Name	Description	Reference to mentioned use case objectives

1.6 Use case conditions

Use case conditions
Assumptions
Prerequisites

1.7 Further information to the use case for classification / mapping

Classification Information
Relation to other use cases
Level of depth
Prioritisation
Generic, regional or national relation
Nature of the use case
Further keywords for classification

1.8 General remarks

General remarks

2 Diagrams of use case

Diagram(s) of use case

3 Technical details

3.1 Actors

Actors			
Grouping		Group description	
Actor name	Actor type	Actor description	Further information specific to this use case

3.2 References

References						
No.	References type	Reference	Status	Impact on use case	Originator / organisation	Link

4 Step by step analysis of use case

4.1 Overview of scenarios

Scenario conditions						
No.	Scenario name	Scenario description	Primary actor	Triggering event	Pre-condition	Post-condition

4.1 Steps – Scenarios

Scenario								
Scenario name…:								
Step No.	Event	Name of process/ activity	Description of process/ activity	Service	Information producer (actor)	Information receiver (actor)	Information exchanged (IDs)	Requirements R-ID

5 Information exchanged

Information Exchanged			
Information exchanged ID	Name of information exchanged	Description of information exchanged	Requirements IDs

6 Requirements (optional)

Requirements (optional)		
Categories ID	Category name for requirements	Category description
Requirement ID	Requirement name	Requirement description

7 Common Terms and Definitions

Common terms and definitions	
Term	Definition

8 Custom information (optional)

Custom information (optional)		
Key	Value	Refers to section

A smart fortwo car is tested by the insurance industry.

Source: http://www.dailymail.co.uk/sciencetech/article-1019650/Mini-smart-car-earns-marks-safety-crash-tests.html

THE TESTING MOTIVE

What should go right?

Fit two people comfortably

Park in a narrow spot

Fill Tank

Drive in City (fast?)

…

What could *possibly* go wrong?

Unpleasant emissions

Gasoline leak

Overloading

Crash

”Elk test”

…

EU H2020 Programme GA No. 654113

Test requirements are <u>translated</u> to different *test setups* and *test designs*.

Test System / Experiment Setup

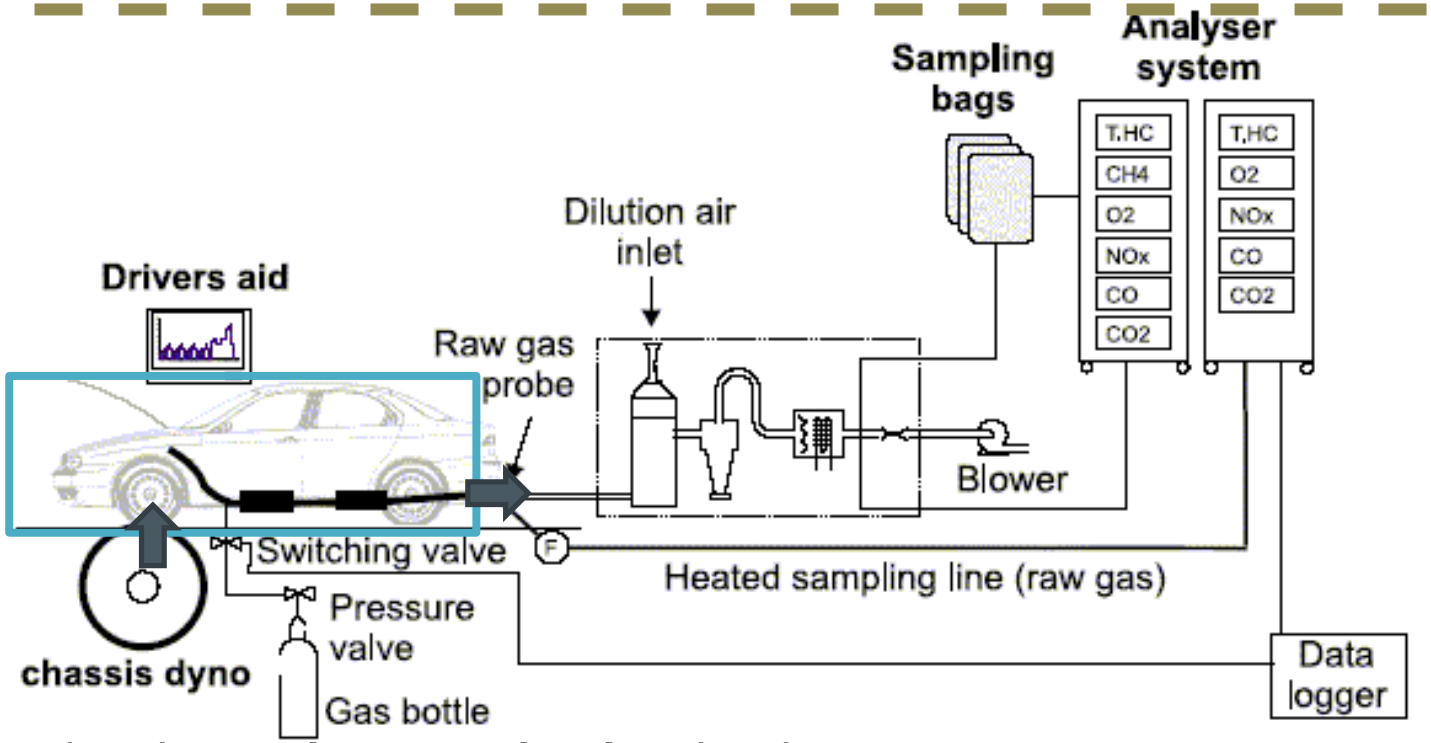

Source: http://www.daham.org/basil/leedswww/emissions/cvs.htm

- **Object**/Device **under Investigation** (**OuI**)
- System under Test (here same as OuI: component test)
- **Experiment Setup**
- **Inputs/Outputs (Measurements) ➔ Test criteria, Test Procedure**

TEST SPECIFICATION ELEMENTS

Key Questions to be answered in **test description**:

WHY TO TEST?
WHAT TO TEST?
WHAT TO TEST *FOR*?

test case /
Test requirements

↓

HOW TO TEST?

test specification
Test design, etc.

Key Questions to be answered for **test specification**:

WHY TO TEST?

WHAT TO TEST?

WHAT TO TEST *FOR*?

HOW TO TEST?

Typical situations for testing.

Basic test runs → engineering process

- ✓ Components/units execute
- ✓ Integrated system executes
- ✓ Quantify component performance

From Use case → Validate functions

- ✓ System functions operate
- ✓ Meet performance criteria / KPI

…

From Standards →Conformance / Compliance

Certification: What could go wrong?

- ✓ Unexpected inputs do not lead to castrophic failure

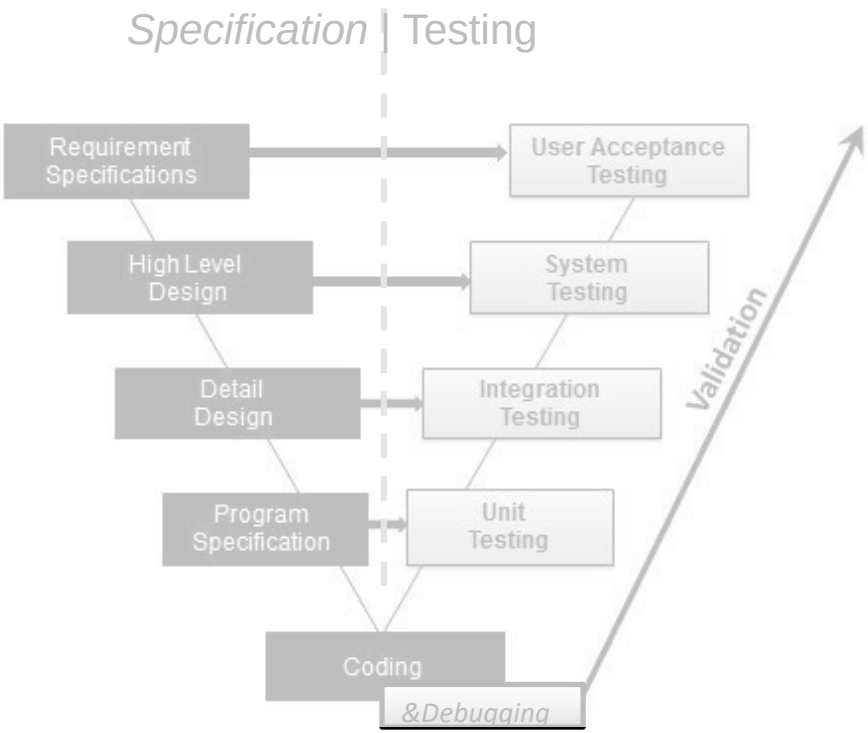

Key Questions to be answered for **test specification**:

WHY TO TEST?

WHAT TO TEST?

WHAT TO TEST *FOR*?

HOW TO TEST?

EU H2020 Programme GA No. 654113

Test **System & Domain**

System under Test (SuT):
is a system configuration that includes all relevant properties, interactions and behaviors (closed loop I/O and electrical coupling), that are required for evaluating an OuI as specified by the test criteria.

Object under Investigation (OuI): the component(s) (1..n) that are subject to the test objective(s).

Remark: OuI is a subset of the SuT.

Domain under Investigation (DuI)*:*
Identifies the domains of test parameters and connectivity relevant to the test objectives.

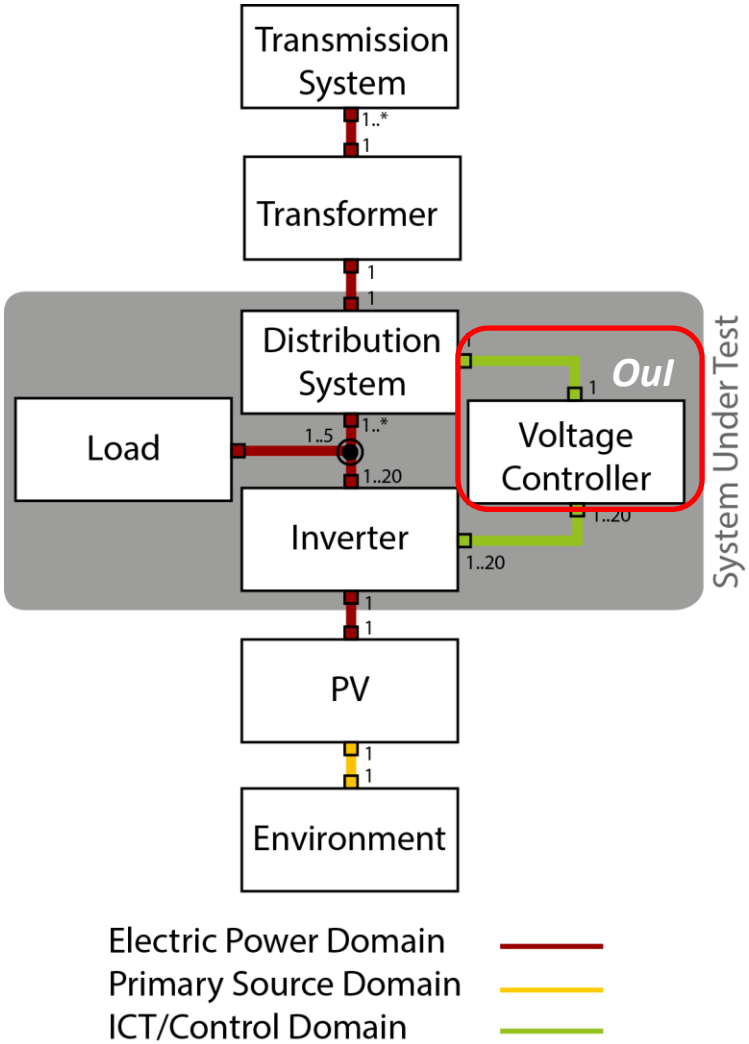

Test System **Functions**

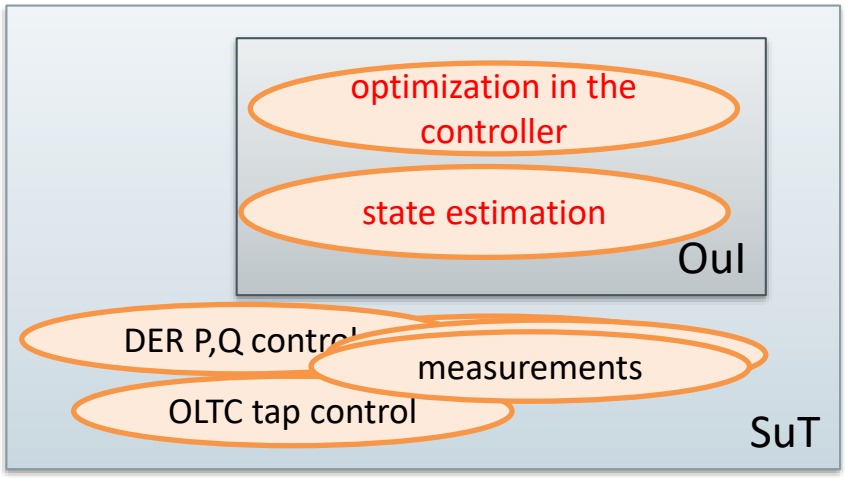

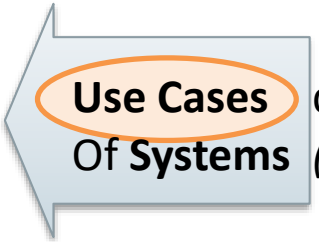

define Functions
(IEC 62559 approach)

Functions under Test (FuT): the functions relevant to the operation of the system under test, as referenced by use cases.

Function(s) under Investigation (FuI): the referenced specification of a function realized (operation-alized) by the object under investigation.

Remark: the FuI are a subset of the FuT.

EU H2020 Programme GA No. 654113

Key Questions to be answered for **test specification**:

WHY TO TEST?

WHAT TO TEST?

WHAT TO TEST *FOR*?

HOW TO TEST?

Types of Test objectives: *Purpose of Investigation* (PoI)

- **Verification**
- **Validation**

- **Characterization**
  - Scoring / Performance
  - Modeling / Diagnosing

Test objectives/PoI: *Characterization and validation* of the DMS controller

1. Convergence of the optimization (*validation*)
2. Performance of the optimization under realistic conditions (*characterization*)
3. Accuracy of the state estimation (*characterization*)

Definition of PoI types.

Characterization test: a measure is given without specific requirements for passing the test.

Examples: characterizing performance of a system; developing a simulation model.

Validation test: functional requirements and abstract measures are provided, but are subject to interpretation; qualitative test criteria.

Example: is a controller ready for deployment?

Verification test: Tests where requirements are formulated as quantitative measures and thresholds of acceptable values are quantified.

Example: Testing if a component conforms to a standard.

EU H2020 Programme GA No. 654113

Designing Test Criteria
Detailing Sequence

- **Test objective → PoI → Test Crit.**
- **Test criteria:** How to break down the PoIs?
  - *Target metrics* (criteria): list of metrics to quantify each PoI
  - *Variability attributes:* controllable or uncontrollable parameters to "disturb" SuT
  - *Quality attributes* (thresholds): test result level or quality of the TM required to pass or conclude the testing.

Target metrics:

1. 1.1 convergence (when/how often?), 1.2. How fast?, 1.3. solution quality
2. 2.1 Voltage deviation
   2.2 number of tap changes,
   2.3 network losses
3. Voltage, P, Q estimation errors

Variability attributes: Load patterns (realistic, annual variation; applies to criteria 1-3); Communication attributes (packet loss, delays)

Quality attributes (thresholds):

"1.2: convergence within 2 sec" (*validation*)

"3.* estimation quality characterized with confidence 95%" …

EU H2020 Programme GA No. 654113

“Flash”-Exercise:
What is the SuT and OuI of your experiments? What are the PoIs?

- ***System under Test***

What ist the system under test (SuT)?

What is the Object under Investigation (OuI)?

What is the Domain under Investigation (DuI)?

What are the Function under Test (FuT) and Function under Investigation (FuI)?

- ***Test Criteria***

What are the items for Purpose of Investigation (PoI) in terms of validation, verification or characterization?

What are the Test Criteria and metrics to formalize and quantify the PoI?

What will the be the a satisfying test result? (e.g. characterization: precision, verification: test thresholds)

EU H2020 Programme GA No. 654113

Key Questions to be answered for **test specification**:

WHY TO TEST?

WHAT TO TEST?

WHAT TO TEST *FOR*?

HOW TO TEST?

Test Specification & Design

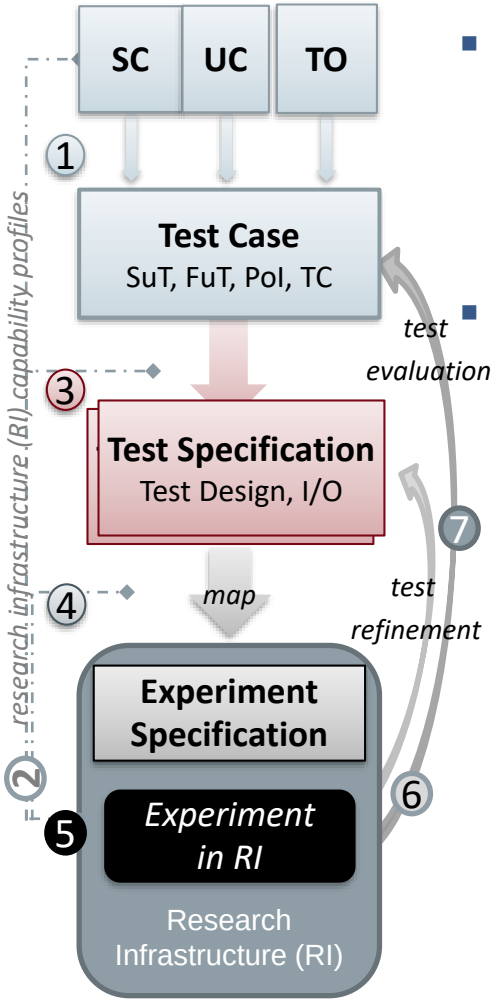

- **Given:**
  - ✓ Purpose of Investigation (PoI) & Test Criteria
  - ✓ System & Domain categories and relations
- **To Specify**:
  - ❑ Precise system (specific system configuration)
  - ❑ Which variables to manipulate & which to measure
  - ❑ How to quantify the test metrics (based on test data)
    - ❑ Sampling of the input spaces (design of experiments methodology)
    - ❑ Combination and interpretation of the outputs
  - ❑ The test design / procedure.
  - ❑ Mapping to actual lab setup (experiement setup)

EU H2020 Programme GA No. 654113

”Test design”

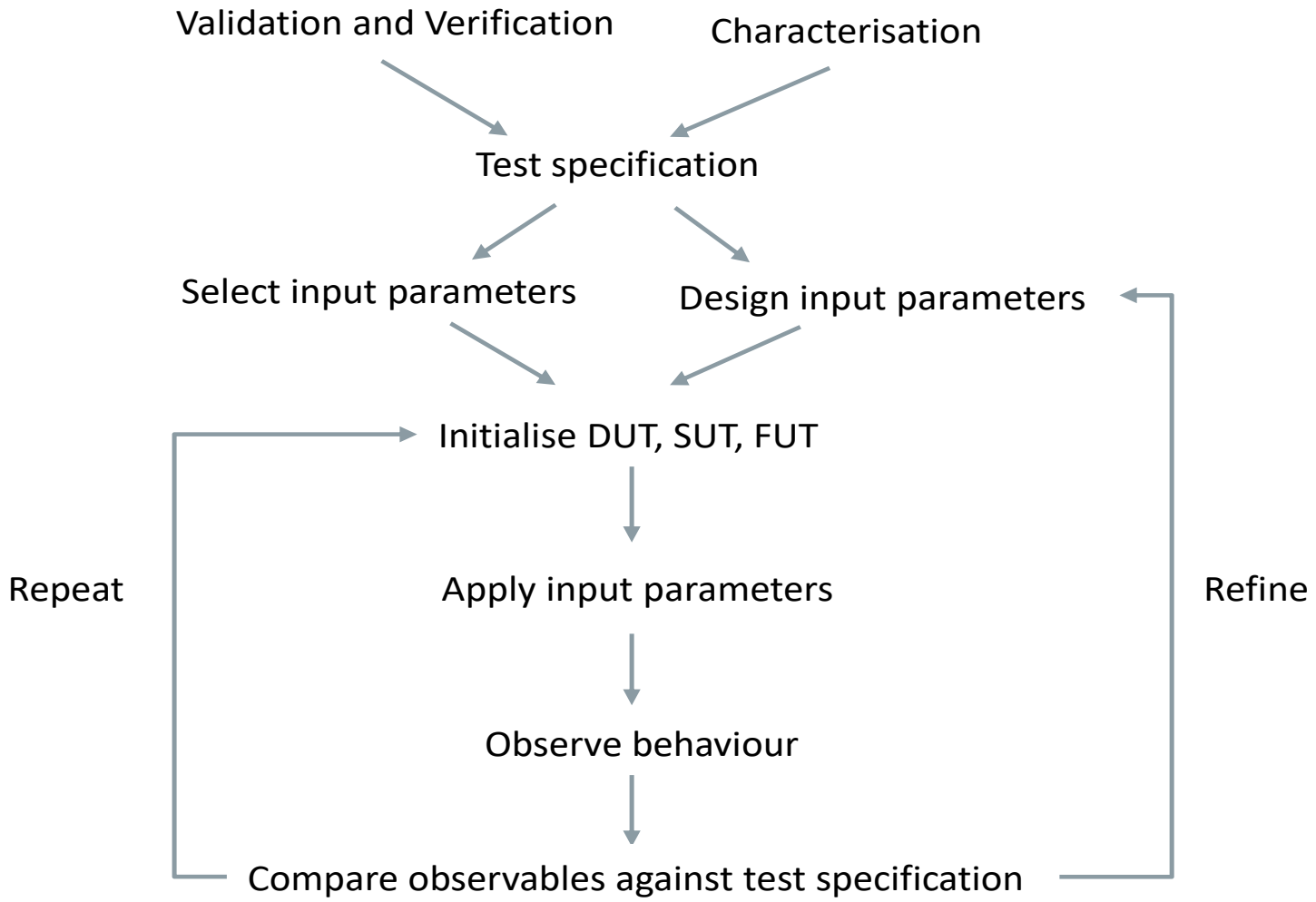

EU H2020 Programme GA No. 654113

By Tim Wang, flickr
https://www.flickr.com/photos/jiazi/4374203947

Test specifications
should **not be confused**
with *use case requirements*.

The basics

HOLISTIC TEST DESCRIPTION

Holistic test *description*

THREE levels of specification

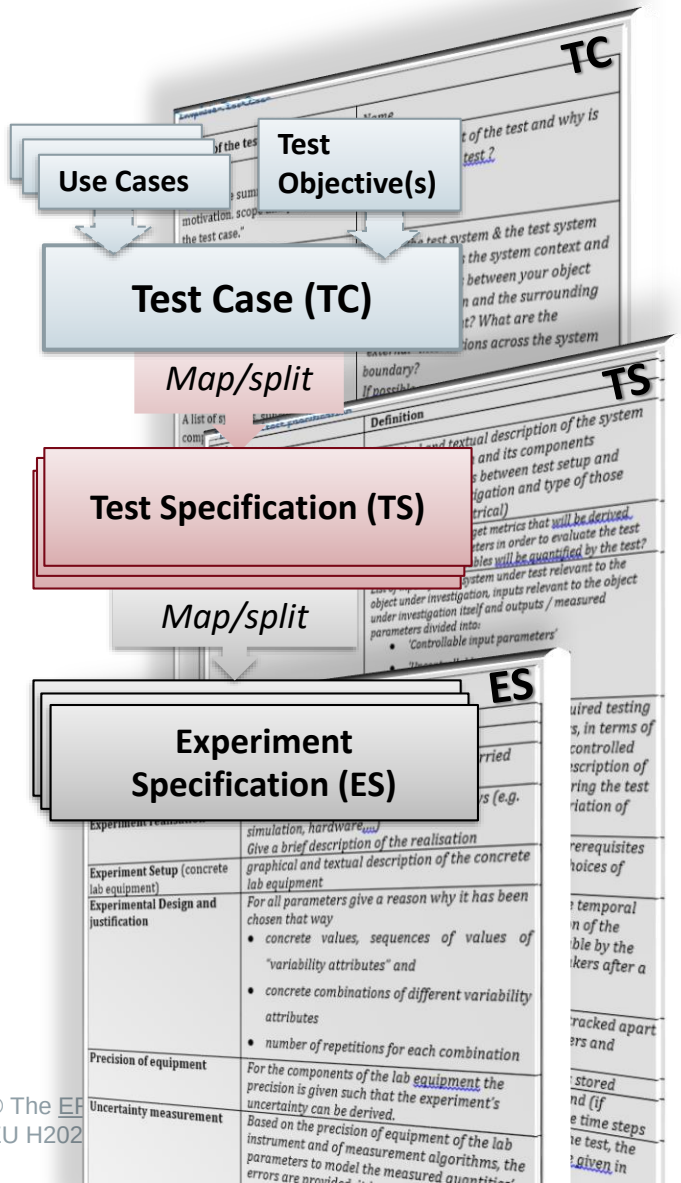

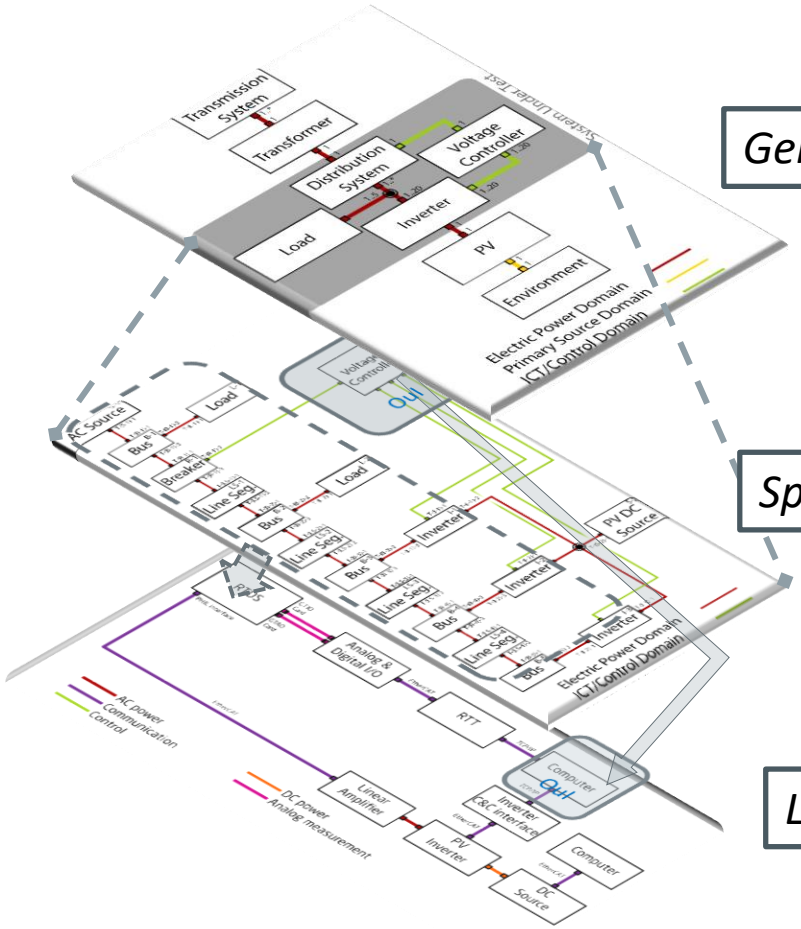

Test System vs. Experiment Setup

- Hardware Set up
- Software Set up
- In field Test
- MV test capability
- Hardware and software integration
- Real Time and HIL
- HW Grid and components simulator/emulator
- Real scale components
- Interoperability and communication
- Automated test
- Co-simulation or multi-domain simulation test

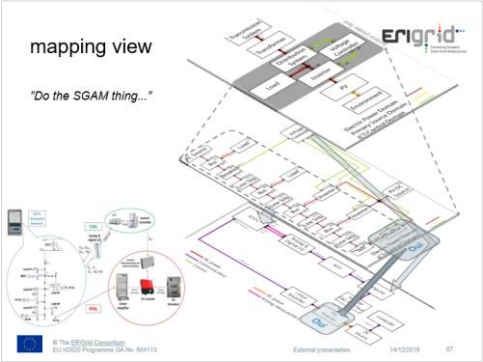

Test case, test specification, experiment specification

HOLISTIC TESTING ‘STEPS’

Overall Specification & mapping procedure

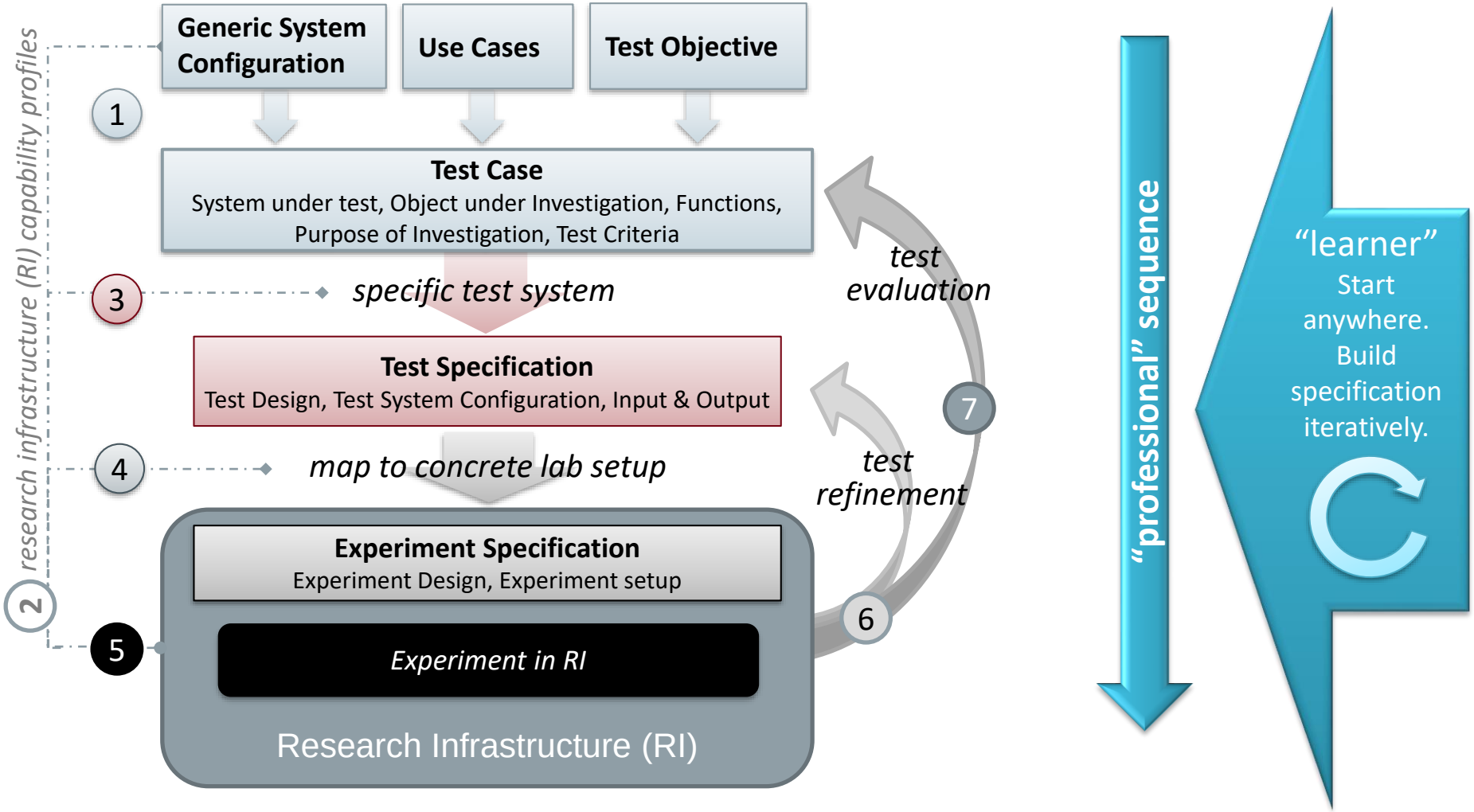

“test description”

- Differentiate between:
  Test Case; Test Specification; Experiment Specification
- A **Test case** provides a set of conditions under which a test can determine whether or how well a system, component or one of its aspects is working given its expected function.
- A **test specification** aims to clarify the object under investigation, test objective, and by what means a test is to be carried out (i.e. test system and test design): what is to be tested, why, and how.
- An **experiment specification** builds on a given test specification and the specifics of a given lab infrastructure and provides the additional information required to carry out a concrete test or experiment in the lab.

EU H2020 Programme GA No. 654113

Test descriptions

Connecting European Smart Grid Infrastructures

Template Test Case

Name of the test case	*Name*
Narrative "a storyline summarizing motivation, scope and purpose of the test case."	*What is the subject of the test and why is the purpose of the test?*
System under Test (*SuT*): "a (specific) system configuration	*What is the test system* *boundary? What is the s*
Domain under Investigation (***DuI***): "Identifies the relevant domains or sub-domains of test parameters and connectivity."	*Which interactions are* *case? Which domains of* *be included/emulated i* *setup? In a multi-domai* *interactions need to be* *identify the domains an* *that are relevant for thi*
Functions under Test (*FuT*) "the functions relevant to the operation of the system under test, as referenced by use cases"	*Which use cases apply t* *which system functions* *operational FuI to be in* *functions required to be* *final test setup.*

Template test specification

Title	Definition
Ref. Holistic test case	
Test System Setup (also graphical)	*Graphical and textual description of the system under investigation and its components including interfaces between test setup and Object under investigation and type of those interfaces (e.g. electrical)*
	of the target metrics that will be derived *d parameters in order to evaluate the test* *hich variables will be quantified by the test?*
	for the system under test relevant to the *nvestigation, inputs relevant to the object* *gation itself and outputs / measured* *parameters divided into:* *trollable input parameter* *controllable input param* *asured parameters'*
	of mapping betwee *available test paran* *nce, decision criteria* *s. Textual or graphic* *ce of steps carried o* *including parameter ranges an* *input parameter.*
Initial system state	*Description of conditions that a*
Evolution and test si	*input parameters (e.g. opening* *certain amount of seconds)* *Evolution of variability attribu*
Other parameters	*Information of data that shoul* *from the input and output para* *system state, test signals*
Storage of data	*In which format are the param*
Temporal resolution	*Discrete or continuous simulati* *applicable) resolution of the di*
Source of uncertainty	*In order to evaluate the quality* *possible sources of uncertaintie* *how they can be quantified.*
Suspension criteria / Stopping criteria	*Under which conditions are the* *valid or the test is interrupted*

Scenario & Generic System Configuration

Use Cases

Test Objective

SuT | *OuI* | *DuI* | FuT | *FuI* | PoI

Holistic Test Case

Test Criteria

Test Specification

Test Design, Test System Configuration, Input & Output

Template experiment specification

Title	Definition
Ref. Test Spec.	
Research Infrastructure	*Specify the RI where the experiment is carried out*
Experiment realisation	*The setup can be realised in different ways (e.g. simulation, hardware,...)* *Give a brief description of the realisation*
Experiment Setup (concrete lab equipment)	*graphical and textual description of the concrete lab equipment*
	rameters give a reason why it has been *at way* *ete values, sequences of values of* *bility attributes" and* • *concrete combinations of different variability attributes* • *number of repetitions for each combination*
Pre	
Un	*parameters to model the measured quantities'* *errors are provided it is specified how* *experiment's uncertainty can actually be measured.*

Experiment Specification

Experiment Design, Experiment setup

More in „Hand-out“

Holistic Testing: exemplary test setup

- Coordinated voltage control algorithm executed in a hardware central controller
- Holistic testing: It is necessary to adequately model the communications

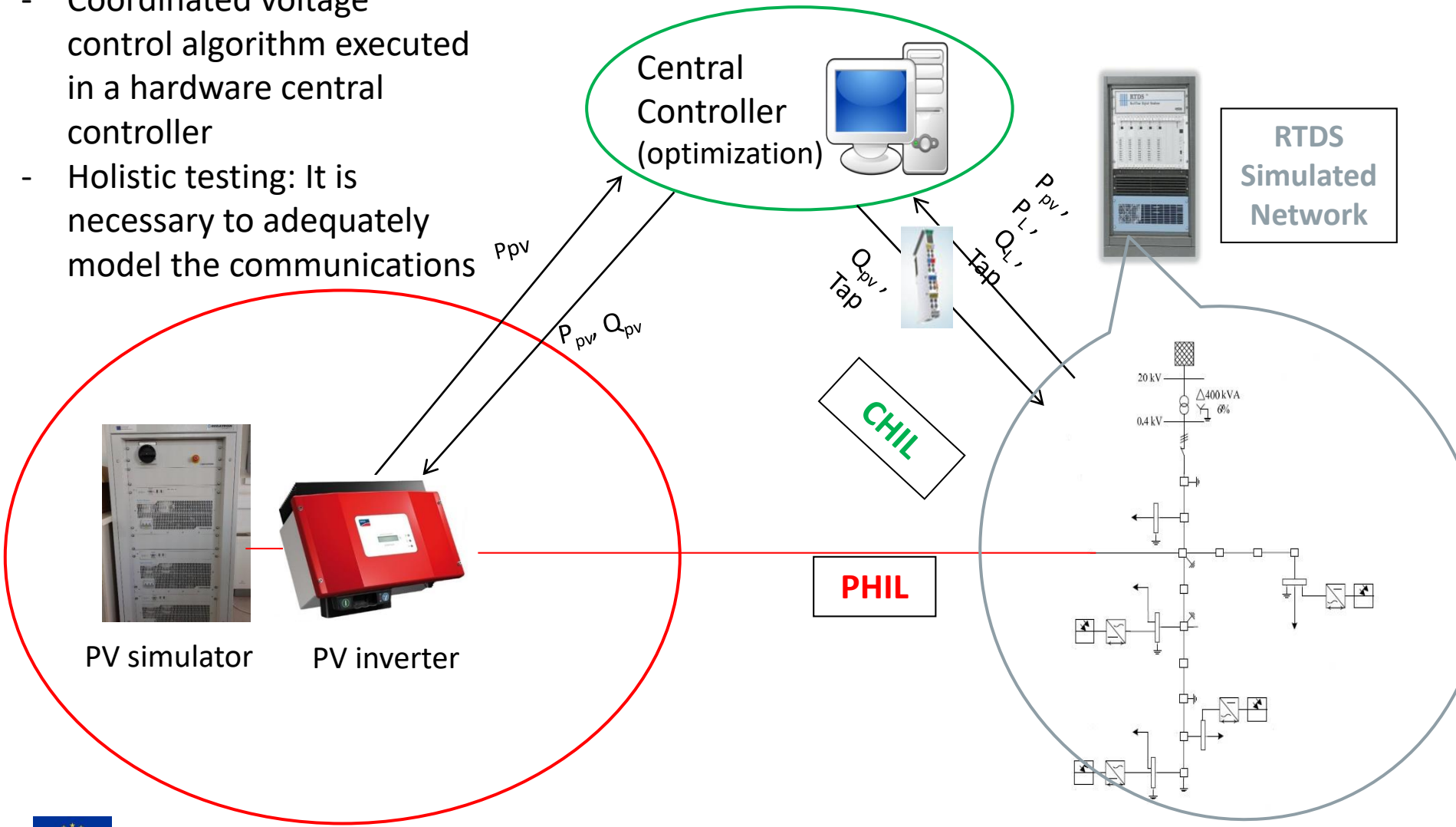

Holistic Test Case Example

TEST CASE:

- **Narrative**: For a DMS controller in development stage (simple implementation) the performance of the DMS algorithm and controller should be evaluated under realistic conditions. This test, could be seen as the last step before installing the DMS in the field.
- **SuT**: DMS, DER, OLTC, transformer, distribution lines, telecom network
  - OuIs: DMS_controller
  - DuI: **Electric power** and **ICT**
- **FuT**: DER P,Q control, measurements, OLTC tap control, comm. via ICT
  - FuI: optimization in the controller, state estimation
- **Test objectives/PoI**: *Characterization and validation* of the DMS controller
  1. Convergence of the optimization (*validation*)
  2. Performance of the optimization under realistic conditions (*characterization*)
  3. Accuracy of the state estimation (*characterization*)
- **Test criteria** – *how to formulate these objectives?*

Target criteria - Variability attributes: - Quality attributes

Potential Test setups:

- Pure simulation (e.g. co-simulation)
- Combination of virtual & physical interfaces and simulated components. PHIL and CHIL
- Full hardware setup

Holistic Test Case Example

TEST CASE:

- **SuT**: … Ouls: DMS_controller; Dul: **Electric power** and **ICT**
- **FuT**: Ful: optimization in the controller, state estimation
- **Test objectives/PoI**: *Characterization and validation* of the DMS controller
  1. Convergence of the optimization (*validation*)
  2. Performance of the optimization under realistic conditions (*characterization*)
  3. Accuracy of the state estimation (*characterization*)

[ ] Test criteria –

Target criteria:

1. 1. convergence (when/how often?), 2. How fast?, 3. solutions quality (how suboptimal etc.?)
2. Voltage deviation of all the nodes from 1 pu, number of tap changes, network losses
3. Voltage, P, Q estimation errors

Variability attributes: Load patterns (realistic, annual variation; applies to criteria 1-3); Communication attributes (packet loss, delays)

Quality attributes (thresholds):

"1.2: convergence within 2 sec" (*validation*)

"3.* estimation quality characterized with confidence 95%" …

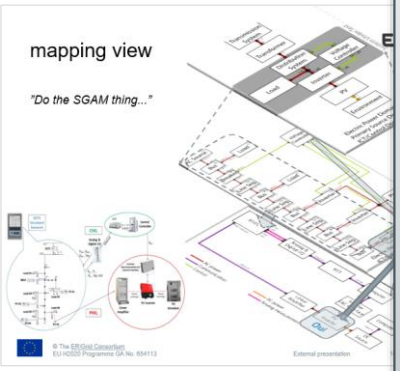

THE END

"Holistic procedure" – one test case, several experiments

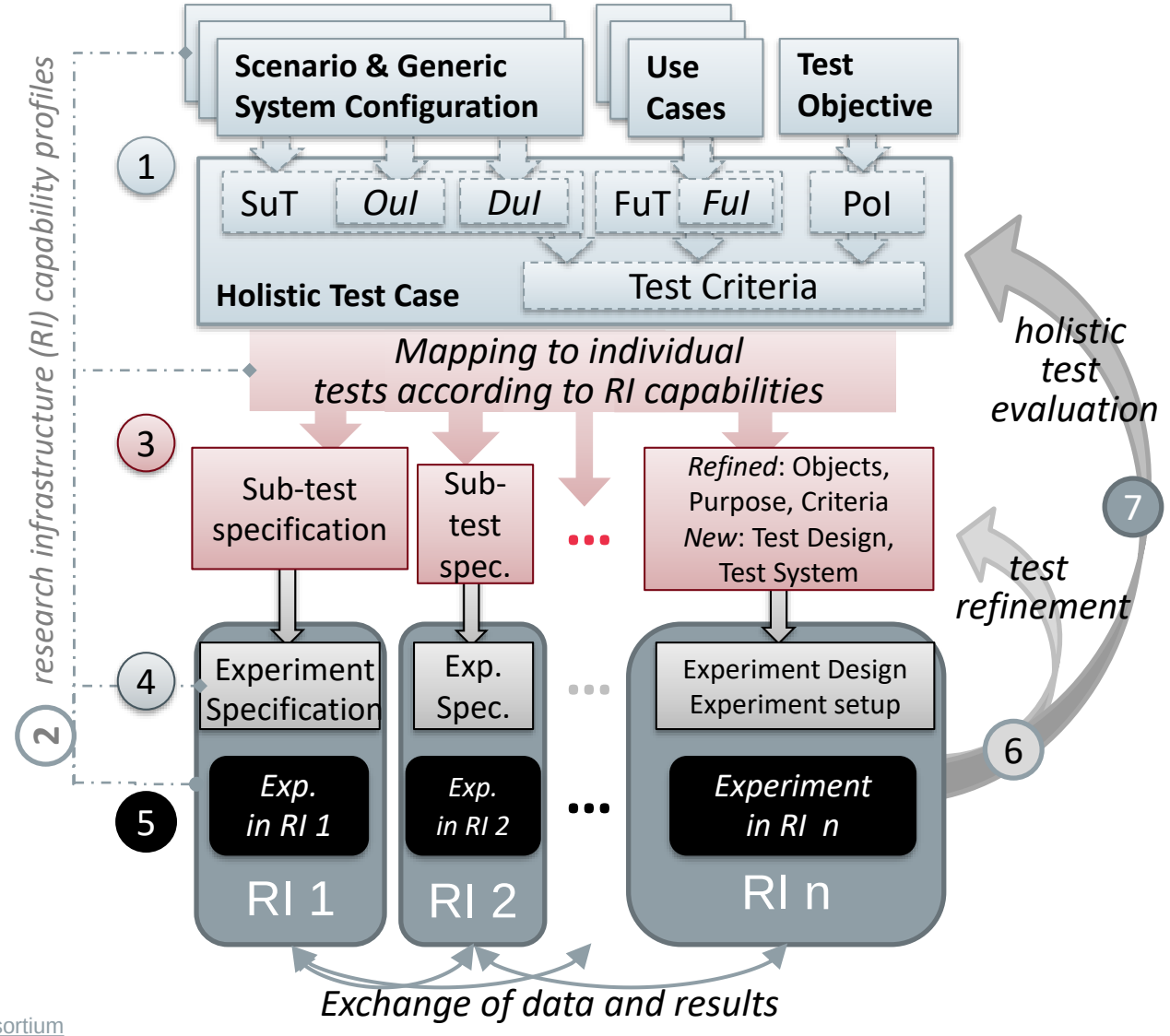

EU H2020 Programme GA No. 654113

Types of System Configurations in the Test/Experiment specification workflow

	Name/ Purpose	Context / Document	GSC/ (S)SC	SCType	Explanation
1	Function-System Alignment	Use Case	GSC	UC-GSC	As SGAM domains & zones: reference designation for functions, independent of test case. Corresponds to D-JRA1.1 Generic System Configurations.
3	Test Case context model	Test Case	GSC	TC-GSC	Establishes type conventions for test case: relevant SC component types, domains, etc., and categorically identifies the SuT (and optional OuIs); specifies multiplicities; “class model”.
4	Test System	Test Specification	(S)SC	TS-SC	A concrete instance of TC-GSC to address a specific OuI and test criteria; labelled terminals and specific connections; OuI and SuT identified as overlay annotation.
	Experiment Setup	Experiment Specification	(S)SC	E-SC	The configuration and interconnection of RI components, representing the SuT, and including OuI; also “Test Setup”
2	RI Description	RI database entry	(S)SC	RI-SC	Lab configuration with components, including potential multiplicity and potential connectivity of lab components, but may have undefined connectivity.
	RI information model	RI profiling	GSC	RI-GSC	Specification of Lab profiling data structures, including component types and domain types.

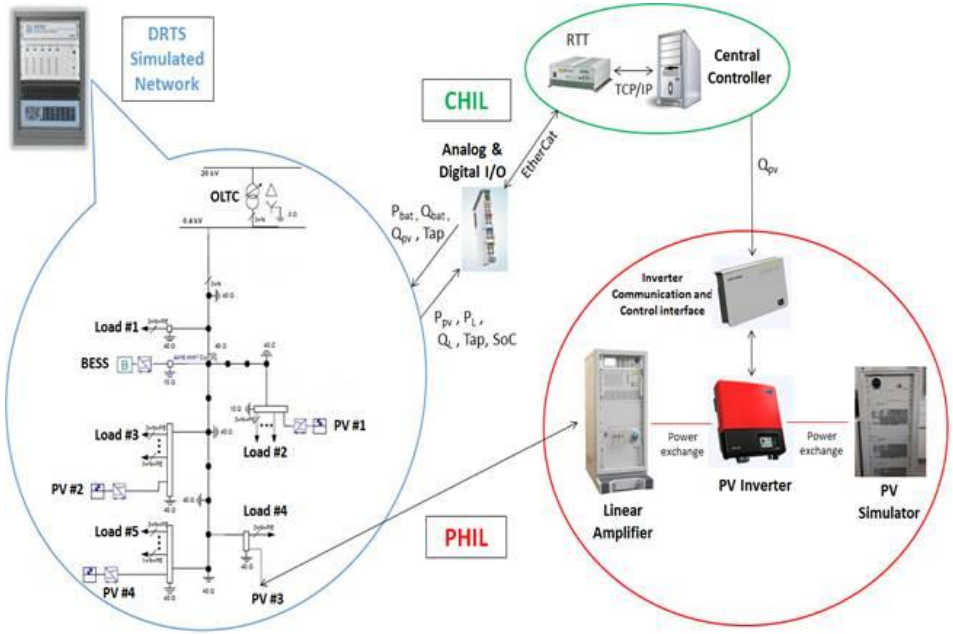

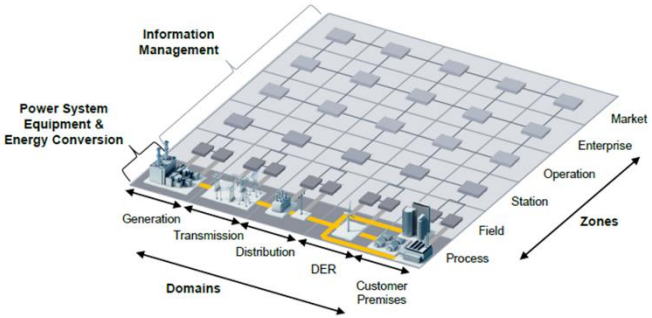

Drawing the 'multi-domain' diagrams

SYSTEM CONFIGURATIONS

Terminology: System Configuration & Use Case

- **Use case:** *Specification* of a set of *actions performed by a system*, which yields an observable result that is, typically, of value for one or more actors or other stakeholders of the system.

*Specification of **Functions***

- **Component:** constituent part of a system which cannot be divided into smaller parts without losing its particular function for the purpose of investigation.
  - *Remark*: In a system configuration, components cannot further be divided; connections are established between components.
- **System** (generic): Set of interrelated elements considered in a defined context as a whole and separated from their environment.
  - *Remark:* In a system configuration, a system represents a grouping of components, which may be divided into sub-systems; interfaces between systems a system.
- **Domain:** An area of knowledge or activity in the context of smart grids characterized by a set of concepts and terminology understood by practitioners in that area.
  - *Remark*: In a system configuration, domains represent a categorization of the connections between systems; a domain can be divided into sub-domains; domains interface with other domains via components.
- **System(s) configuration:** an assembly of (sub-)systems, components, connections, domains, and attributes relevant to a particular context.

*Specification of **System** (context)*

System Configuration Concepts

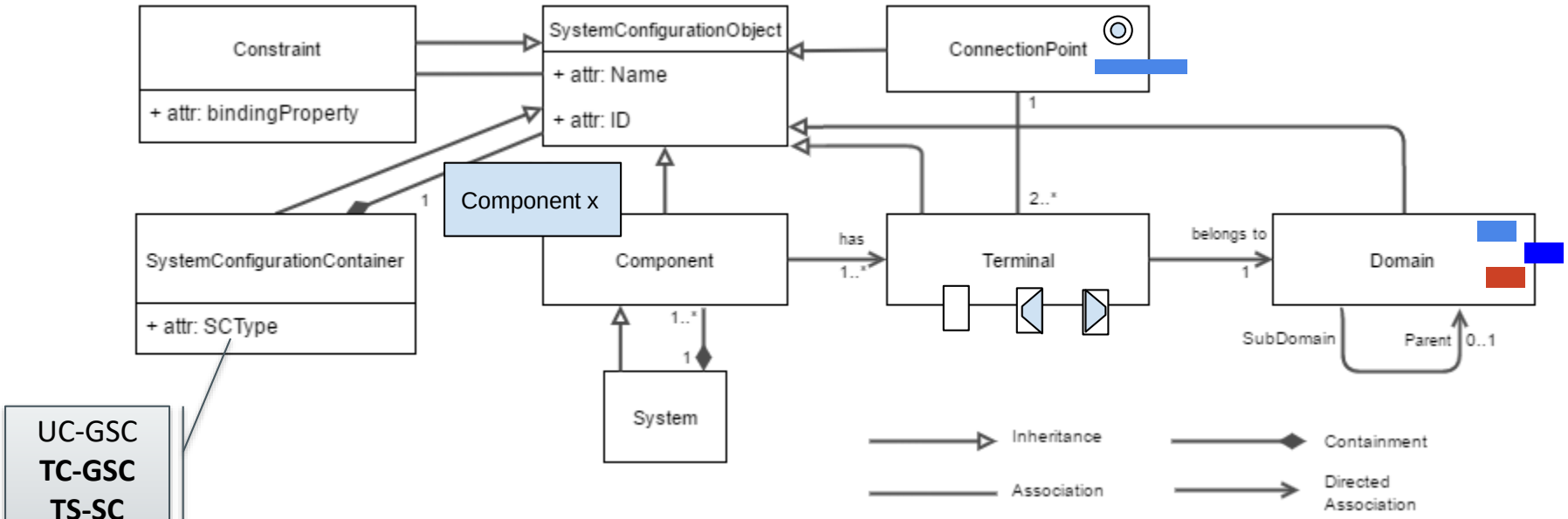

UC-GSC
TC-GSC
TS-SC
E-SC
L-SC
L-GSC

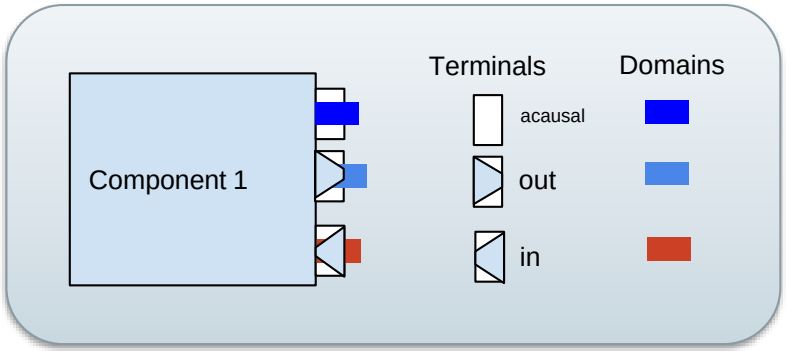

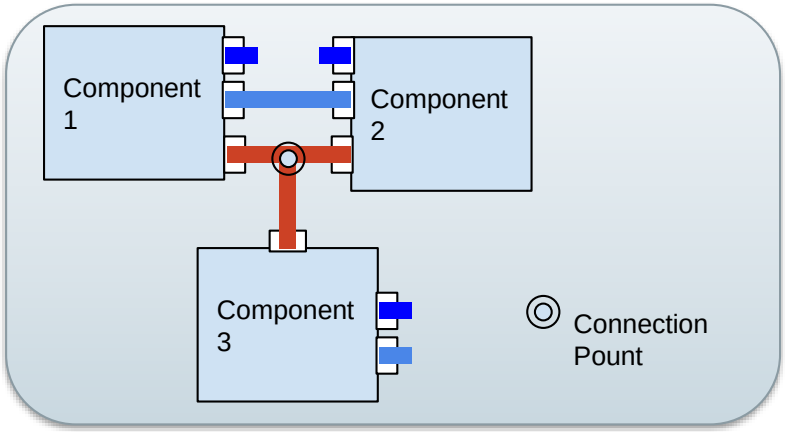

System configuration diagram: Generic SC vs. Specific SC

- *Test case: Generic SC (TC-GSC)*

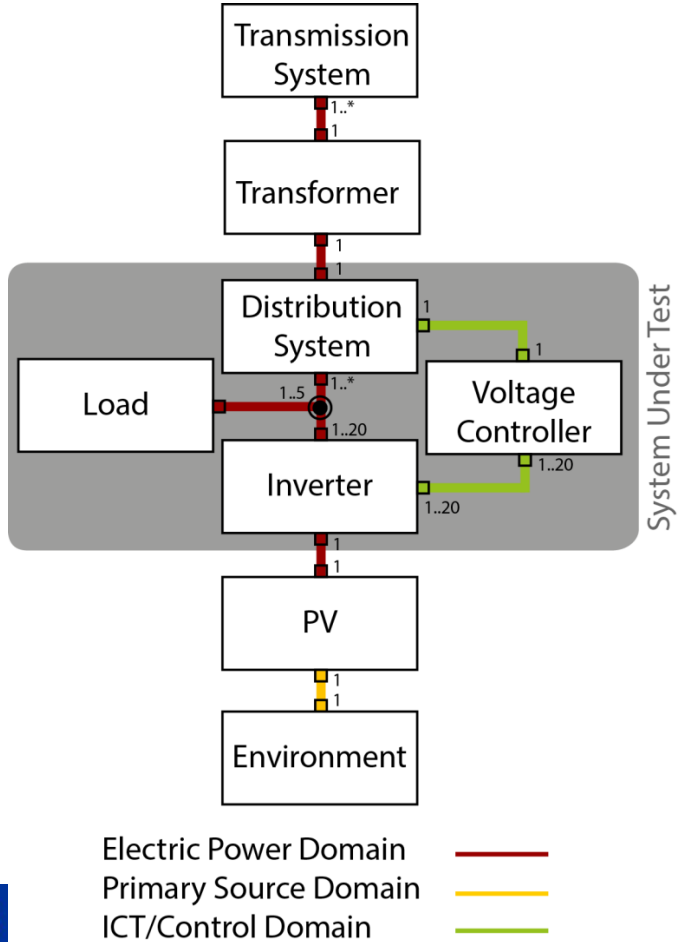

- *Test Specific SC (TS-SC) "Test System"*

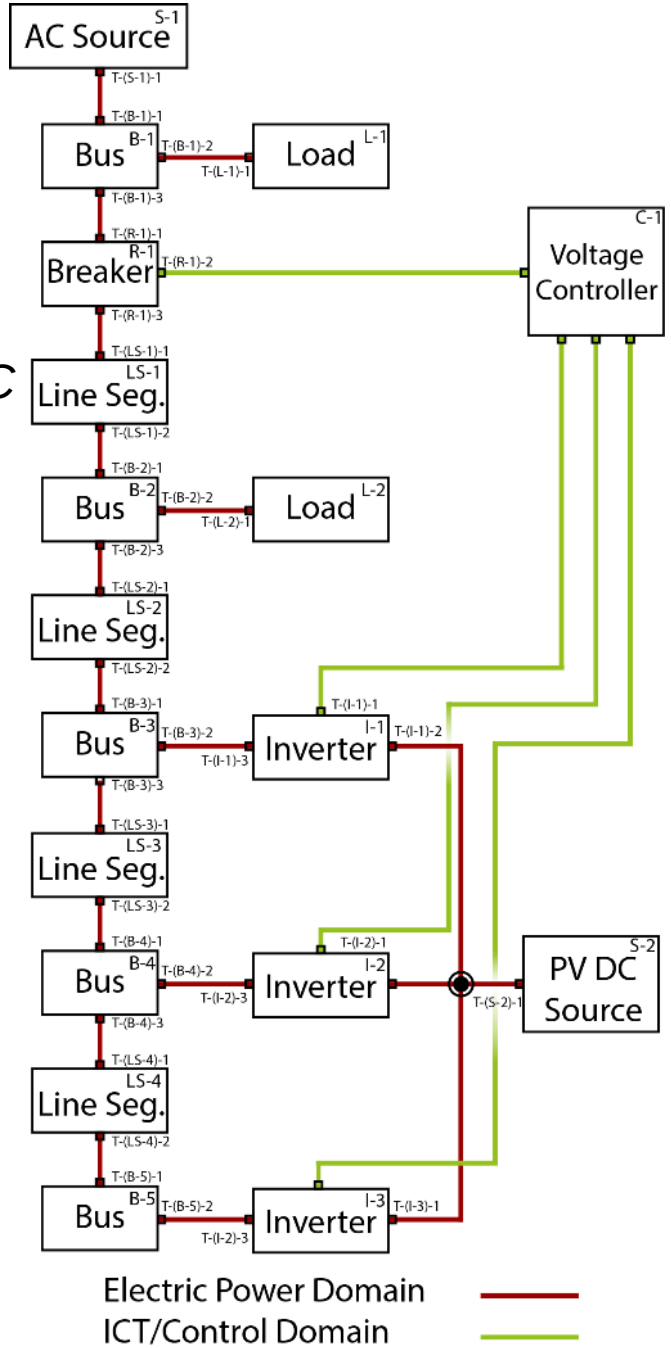

System configuration diagram: Experiment-SC (E-SC)

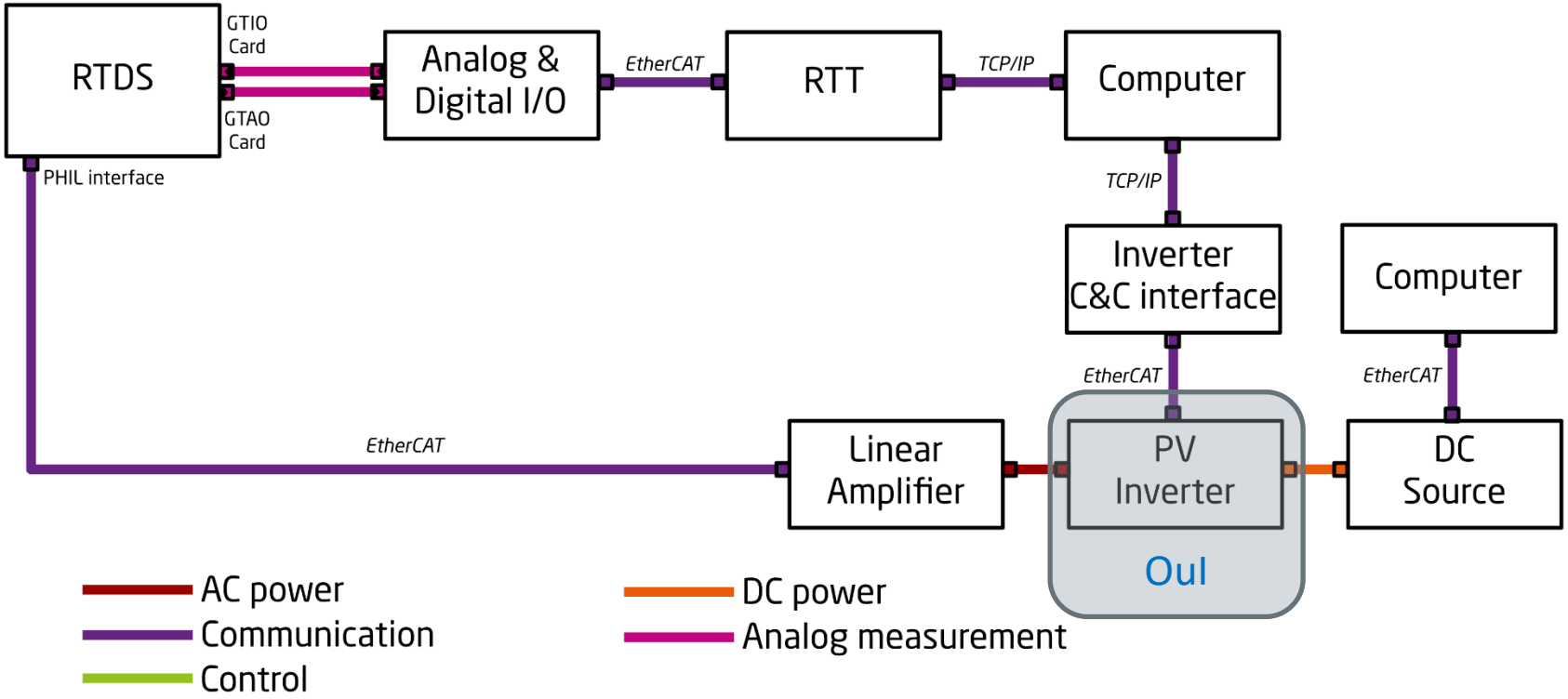

mapping view

”Do the SGAM thing...”

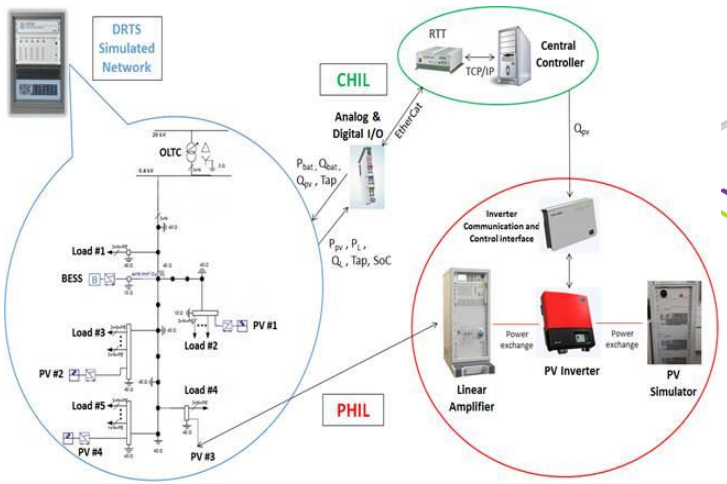

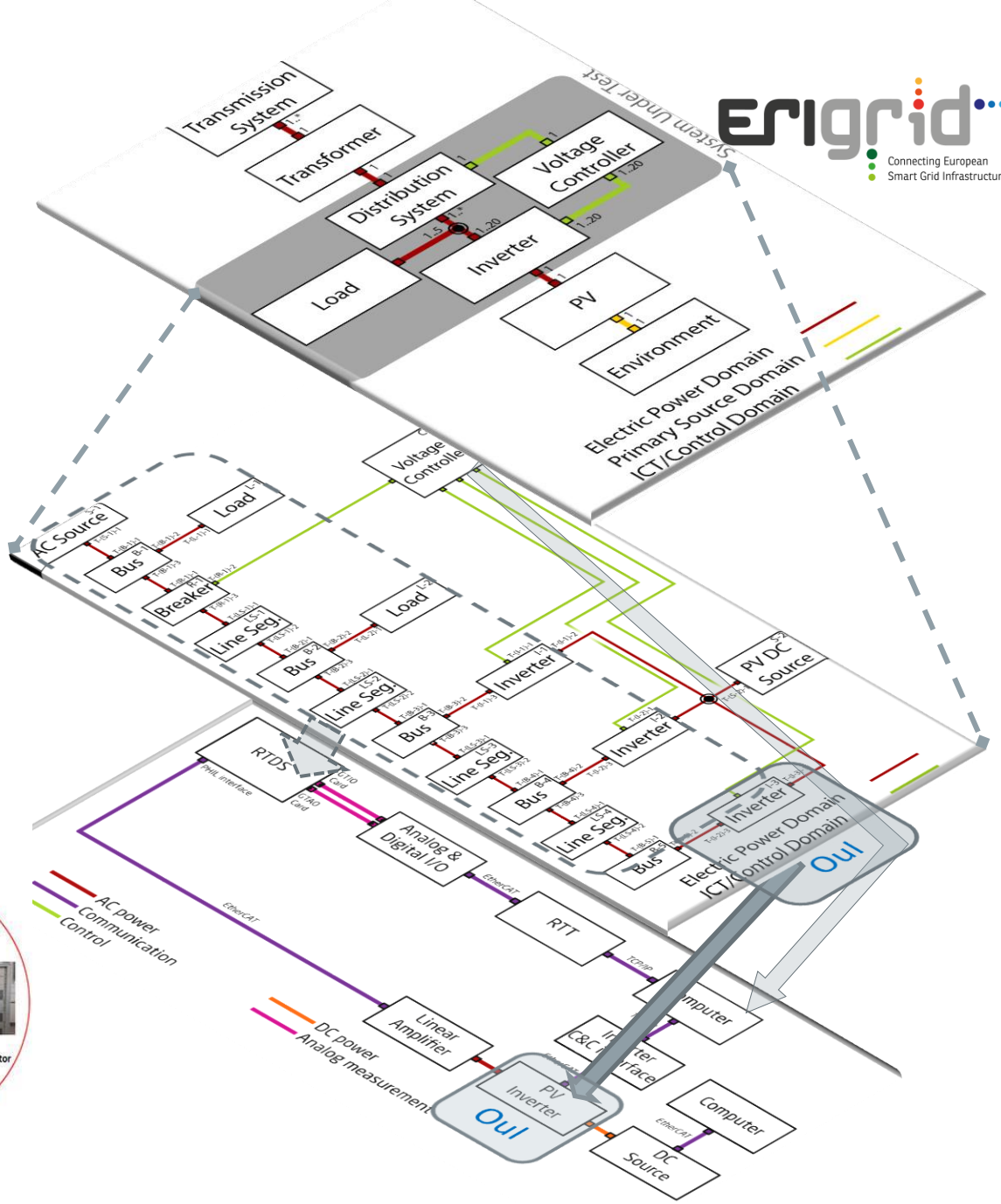

Types of System Configurations in the Test/Experiment specification workflow

	Name/ Purpose	Context / Document	GSC/ (S)SC	SCType	Explanation
1	Function-System Alignment	Use Case	GSC	UC-GSC	As SGAM domains & zones: reference designation for functions, independent of test case. Corresponds to D-JRA1.1 Generic System Configurations.
3	Test Case context model	Test Case	GSC	TC-GSC	Establishes type conventions for test case: relevant SC component types, domains, etc., and categorically identifies the SuT (and optional OuIs); specifies multiplicities; “class model”.
4	Test System	Test Specification	(S)SC	TS-SC	A concrete instance of TC-GSC to address a specific OuI and test criteria; labelled terminals and specific connections; OuI and SuT identified as overlay annotation.
	Experiment Setup	Experiment Specification	(S)SC	E-SC	The configuration and interconnection of RI components, representing the SuT, and including OuI; also “Test Setup”
2	RI Description	RI database entry	(S)SC	RI-SC	Lab configuration with components, including potential multiplicity and potential connectivity of lab components, but may have undefined connectivity.
	RI information model	RI profiling	GSC	RI-GSC	Specification of Lab profiling data structures, including component types and domain types.

Checklist for System Configuration

- Test Case Generic SC
  - Domains defined, high-level interpretation (domains w/ icon in hierarchy)
  - Similar to SGAM Plane + Identify SuT;
  - Align SC names with UC Actors,Systems, Components
- Specific-SC (Test system)
  - Only ”SuT” of TC is detailed here; Identify OuI
  - ”Real world” test system - No lab component names
  - *relevant* coupling domains specific; terminals & connections labelled
  - Use ”domain-specific diagrams” where applicable e.g. SLD, FunctionBlocks
- Lab-SC
  - Only Lab component names, no test-system names
  - Domains: directly based on L-SC specified domains (e.g. Available protocols)

EU H2020 Programme GA No. 654113

What are you able to do?

As checklist

Apply the “scenario description method” to interpret a practical test case. i.e.

- Distinguish the “**System configuration diagrams**” to model
  - Generic System Configuration (for Use case and Test case purposes)
  - Specific “Real-world” System configuration
  - Experiment Configuration
  - Lab profile description
- Identify the *FuT* and *FuI*, *SuT* and *OuI*, in a **test specification**.
- Formulate test objectives in terms of *validation*, *verification* or *characterisation* and formulate *test criteria*
- Distinguish purpose and use of the templates for *test case, test specification*, and *experiment specification*.
- Recognise & distinguish *use case* vs. *test case* from title alone.

Mini-tutorial

APPENDIX:
SC, USE CASE OR TEST CASE?

Definitions & Some examples

- **Examples**

Use Case	– Real-time optimal coordinated voltage control in distribution networks
(system?)	– Agent-based control system for controlling CO2 emissions in virtual power plants
Test Case	– Fault ride-through compliance of offshore wind power plants connected through HVDC based on voltage sourced converter technology

Use Case

- **Use case:** *Specification* of a set of *actions performed by a system*, which yields an observable result that is, typically, of *value* for one or more *actors* or other stakeholders of the system.
  - *"actions performed"* - action typically the first word
  - "by a *system"* – refer to a system
  - Often also the objective or *value* and the respective *actor* is stated

System - Set of interrelated elements considered in a defined *context* as a whole and separated from their *environment.*

Test Case

- A **Test case** provides a *set of conditions* under which a test can determine whether or how well a system, component or one of its aspects is working given its expected function.
  - A test needs to evaluate *conditions "how well"*
  - Of a system in its *operational context* ("working")

EU H2020 Programme GA No. 654113

Try it!

“Validation of aggregator performance in delivering secondary control ancillary service”

- [ ] Test Case
- [ ] Use Case
- [ ] System / Component

“Aggregator Service delivery”

- [ ] Test Case
- [ ] Use Case
- [ ] System / Component
- [ ] unclear

“Aggregator secondary control ancillary service with Distributed Resources for Distribution system operators”

- [ ] Test Case
- [ ] Use Case
- [ ] System / Component
- [ ] unclear

“Aggregator for Resources connected to the Distribution Network”

- [ ] Test Case
- [ ] Use Case
- [ ] System / Component

“Solution”

“Validation of aggregator performance in delivering secondary control ancillary service”

- **[x] Test Case**
  - keyword: “validation…” with corresponding use case “delivery of secondary control service”
- Not: [ ] Use Case [ ] System / Component

“Aggregator Service delivery”

- Not clear *[ ] Test Case – is it a test at all?; [ ] Use Case – what service?; [ ] System / Component – more than just a system (noun/object), as “service delivery” is an action .*
- **[x] unclear**

“Aggregator secondary control ancillary service with Distributed Resources for Distribution system operators”

- [ ] Test Case – *no evaluation objective mentioned.*
- **[x] Use Case** – all elements specified: action , system (performing the action), stakeholder
- [ ] System / Component; [ ] unclear

“Aggregator for Resources connected to the Distribution Network”

- [ ] Test Case – *no evaluation mentioned*
- [ ] Use Case - *no action specified*
- **[x] System / Component** – system with a purpose is identified

APPENDIX: EXAMPLE TEST CASE FORMULATIONS

Component Testing

Usually open loop test (predefined voltage, frequency etc setpoints are applied to the DuT)

TEST CASE:

- OuI: PV inverter
- SuT: Comprises only the OuI
- Test objectives: e.g. Verification of MPPT and anti-islanding capability,

validation, characterization test,

- Test criteria: e.g. Inverter disconnection time below a certain value

Test setup:

  - a) hardware testing of the OuI (e.g. figure below)
  - b) pure simulation

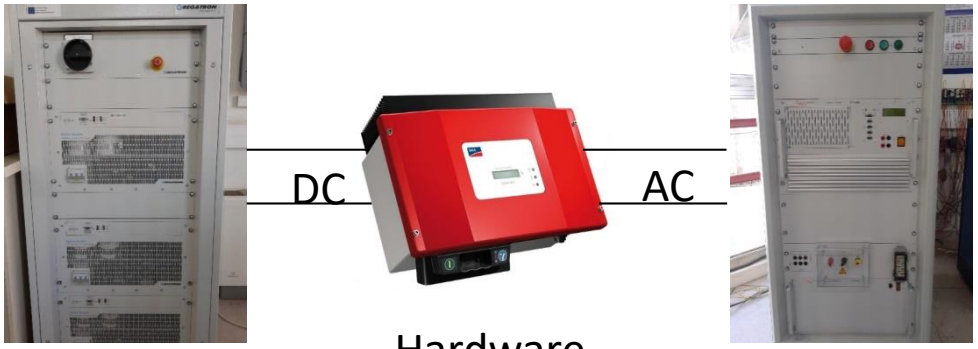

PV simulator

Hardware inverter under test

AC gid simulator

Power System Testing

TEST CASE:

- Narrative: Interactions between the hardware inverter (Q(U) droop control) and OLTC are examined. **Power system testing (not possible with component testing);** 2 local controllers
- SuT: PV and OLTC, transformer, distribution line, upstream network impedance
  - OuIs: OLTC and PV inverter
- FuI: PV inverter's Q(U) control, OLTC controlling secondary voltage
- DuI: Electric power
- Test objectives / PoI: Characterization and validation of the SuT
- Test criteria: OLTC behavior according to reactive power levels and inverter's reaction to tap changes

Test setup:

a) Comprises virtual platforms and physical devices i.e. PHIL simulation/testing

b) Pure simulation

c) Full hardware testing (practically difficult)

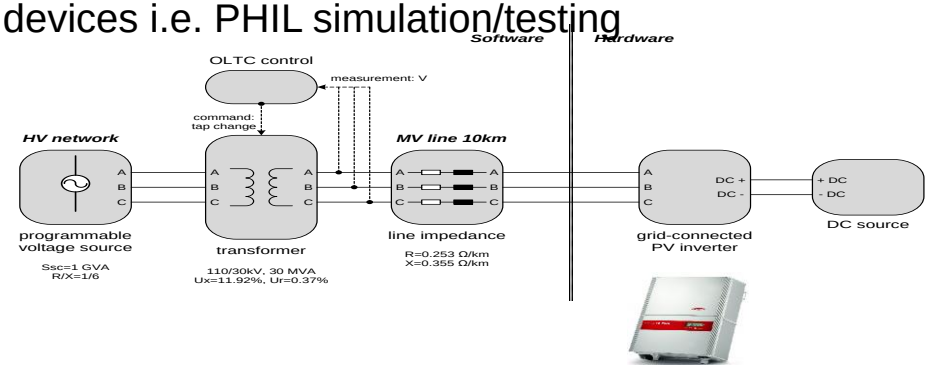

OTHER

Methodology for development of Holistic Test Cases

- Smart Grid testing across Research Infrastructures
- Applicable to combined hardware/simulation and multi-domain testing
- Coordination of multiple experiments
- Flexible: Informal to fully formalized approach
- Concept and deliverable lead: Kai Heussen Esteban Bondy

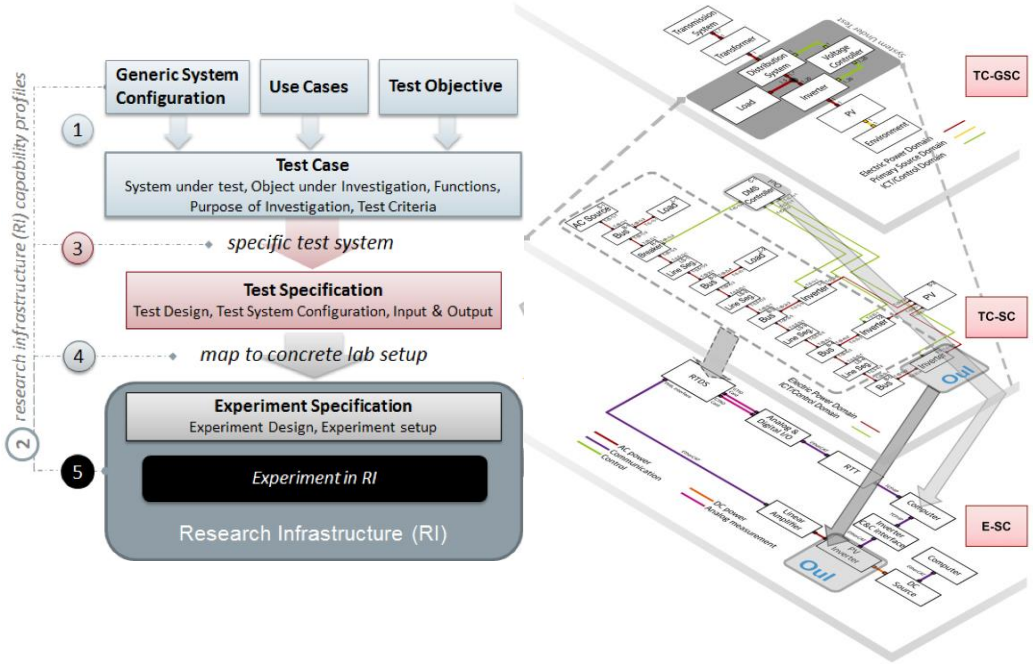

- **Heussen, K., Bondy, D. E. M.,** Nguyen, V. H., Blank, M., Klingenberg, T., Kulmala, A., ... Strasser, T. (2017). *D-NA5.1 Smart Grid configuration validation scenario description method*.
- Blank, M., Lehnhoff, S., **Heussen, K., Bondy, D. E. M.,** Moyo, C., & Strasser, T. (2016). Towards a foundation for holistic power system validation and testing. In *Proceedings of 2016 IEEE 21st International Conference on Emerging Technologies and Factory Automation* IEEE. (2016 Ieee 21st Int. Conf. on ETFA). DOI: 10.1109/ETFA.2016.7733672
- van der Meer, A. A., Palensky, P., **Heussen, K., Bondy, D. E. M., Gehrke, O.**, Steinbrink, C., ... Khavari, A. M. (2017). Cyber-Physical Energy Systems Modeling, Test Specification, and Co-Simulation Based Testing. In *Proceedings of 2017 Workshop on Modeling and Simulation of Cyber-Physical Energy Systems*
- *(&forthcoming)*

EU H2020 Programme GA No. 654113

Reference model for Software Interfaces

- Conceptual model for ICT & Control deployment
- transferrable across Research Infrastructures
- Concept lead and deliverable by DTU: Oliver Gehrke

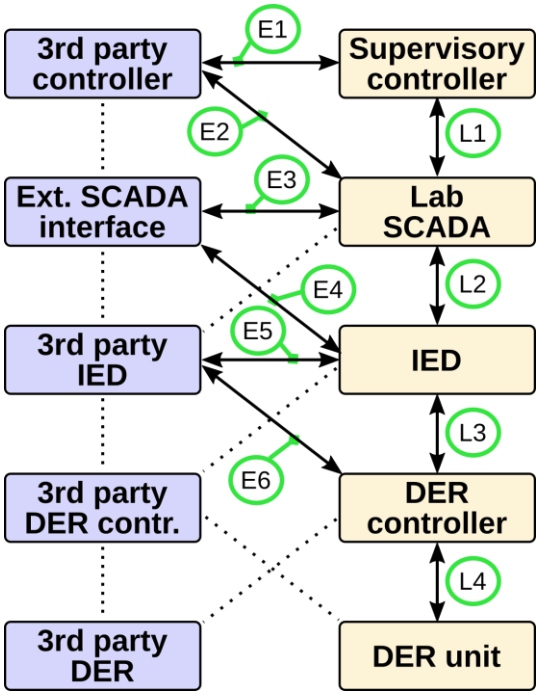

- [*July2017*] D-JRA-3.1. **Gehrke, O.** et al. (forthcoming deliverable
- Strasser, T. I., Moyo, C., Bründlinger, R., Lehnhoff, S., Blank, M., Palensky, P., … **Heussen, K., Gehrke, O.,** … Hatziargyriou, N. D. (2017). An Integrated Research Infrastructure for Validating Cyber-Physical Energy Systems. In *Proceedings of 8th International Conference on. Industrial Applications of Holonic and Multi-Agent Systems*

EU H2020 Programme GA No. 654113