European Research Infrastructure supporting Smart Grid Systems Technology Development, Validation and Roll Out

Preliminary Technical Report TA User Project

ECOSMIC, pt.1/4

Grant Agreement No:	**654113**
Funding Instrument:	**Research and Innovation Actions (RIA) – Integrating Activity (IA)**
Funded under:	**INFRAIA-1-2014/2015: Integrating and opening existing national and regional research infrastructures of European interest**
Starting date of project:	**01.11.2015**
Project Duration:	**54 month**

Contractual delivery date:	**Nov 2017**
Actual delivery date:	**26 November 2017**
Name of lead beneficiary for this deliverable:	**Herbert Peremans and Steven van Passel, Univeristy of Antwerp, Belgium**
Deliverable Type:	**Other (O)**
Security Class:	**Confidential, only for members of the consortium (including the Commission Services) (CO)**
Revision / Status:	**draft**

Project co-funded by the European Commission within the H2020 Programme (2014-2020)

Document Information

Document Version: 1

Revision / Status: draft

All Authors/Partners Iolanda Saviuc

Distribution List CRES

Document History

Revision	Content / Changes	Resp. Partner	Date
[Rev. No]	[Short description of document changes]	[Partner Short Name]	DD.MM.YY
[Rev. No]	[Short description of document changes]	[Partner Short Name]	DD.MM.YY
[Rev. No]	[Short description of document changes]	[Partner Short Name]	DD.MM.YY

Document Approval

Final Approval	Name	Resp. Partner	Date
[Review Task Level]	[Given Name + Name]	[Partner Short Name]	DD.MM.YY
[Review WP Level]	[Given Name + Name]	[Partner Short Name]	DD.MM.YY
[Review Steering Com. Level]	[Given Name + Name]	[Partner Short Name]	DD.MM.YY

Disclaimer

Copyright Notice

Table of contents

Abbreviations

CapEx	Capital Expenditures
COE	Cost of Energy
CRES	Centre for Renewable Energy Sources and Saving
DER	Distributed Energy Resource
ECOSMIC	Economic Assessment of Microgrids
GHI	Global Horizontal Irradiance
IRR	Internal Rate of Return
MG	Microgrid
MPPT	Maximum Power Point Tracking
MSP	Minimum Selling Price
NPC	Net Present Cost
NPV	Net Present Value
OpEx	Operational Expenditures
PBP	Payback Period
P&O	Perturb and Observe
TA	Trans-national Access
TEA	Techno-Economic Analysis
UA	University of Antwerp

Executive Summary

The TA visit of ECOSMIC representative Iolanda Saviuc at CRES took place between the 16th and the 20th of October 2017. The visit had been prepared during the weeks before traveling via email and document exchange as well as two web conferences between CRES and UA representatives.

Objective of the TA visit was designed to be twofold. First, collecting economic data about the components of the experimental MG on the CRES premises; second, performing a series of experiments and collecting output data on the proportion of energy sources that meet the load.

The MG components were presented in a tour of the premises upon arrival on the first day. All the pieces of information learned during the tour were logged into a detailed descriptive table, and then built into a draft HOMER model of the MG. The model was then perfected through a targeted interview with the CRES representative Evangelos Rikos. Filling out the required fields in the HOMER software for a valid model ensured indirectly a comprehensive collection of economic data (i.e. making sure no relevant information is forgotten). Output of the HOMER software are first economic assessments of the MG (calculates NPV, COE, etc). The following components have been registered and used:

1. Load: resistive load modelled to be typical for a Greek Island, peak month in August at 4.2 kW
2. GHI and ambient temperature sensors: Based on these measurements the behaviour of a PV generator was simulated using Matlab/Simulink. The peak capacity of this unit was 4.2kW
3. Diesel generator: 12.5 kVA (in maintenance at the time of the visit, therefore emulated by the main grid connection)
4. Lead-acid battery storage: 60V / 670 Ah
5. Battery inverter: 3.3kW
6. Connection to the main grid

Data about the operation of the MG has been collected by running 6 scenarios, 24 hours each at the CRES premises. The scenarios, which were agreed upon beforehand, were as follows:

1. Grid-connected, heavy load, buy-priority
2. Grid-connected, heavy load, sell-priority
3. Grid-connected, light load, buy-priority
4. Grid-connected, light load, sell-priority
5. Island mode, heavy load
6. Island mode, light load

In this context we have defined “heavy load” to be the typical residential load profile on a Greek island; “light load” is the same “heavy load” minus the base load (i.e. the base load is set to be zero). “Buy-priority” and “sell-priority” are the two modes programmed into the grid-connected MG to ensure either covering the shortcomings of the PV by buying from the grid, or by drawing electricity from the storage.

The scenarios were operated by CRES via Matlab/Simulink and have run according to plan, in spite of small impediments typical for lengthy experiments, which demanded at some points to restart parts of the simulation.

Preliminary assessment of the data shows that:

1. This particular MG would be profitable in a real-life environment (NPC negative)
2. For the geographical and economic conditions of Greece the use of PV with storage units is technically reliable even with old (obsolete) equipment

Further research involves a TEA analysis of the MG visited at CRES; a broader evaluation of the Greek case based on the academic literature; comparison with other three MGs in Europe.

1. General Information of the User Project

User Project	
User Project acronym	ECOSMIC
User Project title	Developing and Evaluating an Economic Assessment Framework for Microgrids -- Based on the Concept of Economies of Scope
Main scientific/technical field	Energy
Keywords	DER, Microgrids, Techno-economic assessment, comparability

Leader of the User Group	
Name	Herbert Peremans and Steven van Passel
Phone	+ 32 326 54 670
E-mail address	herbert.peremans@uantwerpen.be; steven.vanpassel@uantwerpen.be
Phone	+32 326 54 895
Nationality	Belgian
Gender	M
Age	
Organization name	Department Engineering Management (ENM), University of Antwerp
Organization address	Prinsstraat 13, 2000 Antwerpen, Belgium
Organization website	www.uantwerpen.be
Position in organization	Gewoon Hoogleraar and Hoofddocent, respectively
Activity type and legal status of organization	Higher Education Institution

Members of the User Group	
Name	Iolanda Saviuc
Phone	+32 485 089 139
E-mail address	iolanda.saviuc@uantwerpen.be
Nationality	Romanian
Gender	F
Age	31
Organization name	Department Engineering Management (ENM), University of Antwerp
Organization address	Prinsstraat 13, 2000 Antwerpen, Belgium
Organization website	www.uantwerpen.be

Position in organization	PhD student
Activity type and legal status of organization	Higher Education Institution

Host Infrastructure	
Name of the Infrastructure/ Installation	Distributed Generation Laboratory (DG-Lab)
Location	CRES – Pikermi, Attiki, Greece
Web Site	*www.cres.gr*
Access Period	16.10.2017 – 20.10.2017

2 Research Motivation

As part of my PhD research at the University of Antwerp (BE) supervised by my promotors, Prof. Steven Van Passel and Prof. Herbert Peremans, I am developing a framework for the economic assessment of microgrids (MGs), based on the concept of economies of scope.

In order to achieve that, I propose analyzing the shortcomings of conventional methods, of which the most popular one is the TEA. Until now, MGs are being evaluated case-by-case with the conventional tools of techno-economic analysis (TEA), such as net present value NPV, internal rate of return IRR, etc – whereas a conceptually based framework would be more broadly applicable and would provide a new benchmark for comparability.

The output of a TEA uses CapEx, OpEx and revenues to provide metrics such as: payback period PBP, net present value NPV, internal rate of return IRR, minimum selling price MSP. The probabilistic distribution of these indicators together with the sensitivity analyses, provide insight on the impact of variable MG configurations, and they constitute the main rationale of my application.

This project will perform, via TA with ERIGrid, a series of TEAs on various MG configurations. We hereby aim at a broad range of technology mixes, MG sizes, operating conditions etc. to derive reliable estimates for the parameters used in the general conceptual framework.

2.1 Objectives

In order to get the broad range of MG configurations required to arrive at reliable results for my research, I am proposing a combination of shorter research stays at more facilities (4 data points are a reasonable start). The TA project of ERIGrid provides the opportunity to a) assess multiple scenarios in the same MG location, and b) compare performances of different MGs in similar scenarios. In addition to the economic data my project will have to take into account specifics of the respective country's energy policy, as it has direct impact on prices of equipment, electricity, CO2.
The input data for the TEA (equipment, quantities, output prices), would be collected by means of interviews and surveys at the respective facilities and by observation of different operation scenarios (i.e. different loads/ load profiles with ongoing experiments, etc.).

Expected outcome of the research stay is a TEA report of the respective MG. The scientific contribution of the research lies with studying the method in action and is twofold: it is an expansion on currently available assessment methods (by enabling comparisons) and it helps develop a new, conceptual, assessment framework.

2.2 Scope

In the case of the first visit at CRES following pieces of equipment were used:

1. Load: resistive load modelled to be typical for a Greek Island, peak month in August at 4.2 kW
2. GHI and ambient temperature sensors: Based on these measurements the behaviour of a PV generator was simulated using Matlab/Simulink. The peak capacity of this unit was 4.2kW
3. Diesel generator: 12.5 kVA (in maintenance at the time of the visit, there emulated by the main grid connection)
4. Lead-acid battery storage: 60V / 670 Ah
5. Battery inverter: 3.3kW
6. Connection to the main grid

Data about the operation of the MG has been collected by running 6 scenarios, 24 hours each at the CRES premises. The scenarios, which were agreed upon beforehand, were as follows:

- Grid-connected, heavy load, buy-priority
- Grid-connected, heavy load, sell-priority
- Grid-connected, light load, buy-priority
- Grid-connected, light load, sell-priority
- Island mode, heavy load
- Island mode, light load

In this context we have defined “heavy load” to be the typical residential load profile on a Greek island; “light load” is the same “heavy load” minus the base load (i.e. the base load is set to be zero). “Buy-priority” and “sell-priority” are the two modes programmed into the grid-connected MG to ensure either covering the shortcomings of the PV by buying from the grid, or by drawing electricity from the storage.

3 State-of-the-Art

Economic and techno-economic assessment of MGs has received significant attention in the academic research of the past decade. A literature survey conducted in ScienceDirect and IEEE about TEA of MGs reveals ca. 100 journal articles and conference papers published between 2008 and 2017 (none existing before 2008). Most of these works focus on either the TEA of adding/changing a component in an existing MG – an ESS (Kaldellis, 2007) or a biogas engine (Sigarchian et al., 2015) – or the use TEA for solving the problem of MG sizing in the planning stage (Kobayakawa and Kandpal, 2014; Mohammadi, Hosseinian and Gharehpetian, 2012).

Another characteristic which the vast majority of the papers have in common is that they focus on one case study, presenting reports such as “Feasibility study of renewable energy-based microgrid system in Somaliland's urban centers” (Abdilahi et al., 2014). While this approach delivers valuable insight into a selected local landscape and exemplifies the use of the method, it stops short of making comparisons possible between different settings /configurations/countries. This has to do inherently with the specifics of a TEA metrics and the limitation to case-by-case evaluation. To the best of our knowledge, a comparison between indicators in different scenarios/different countries/different sizes is yet to be carried out.

Other notable approaches in economic assessment of MGs aim at the optimization of operation costs alone. For example, shared storage drives cost advantage of MGs (Lee, Shaw, and Modi, 2014), whereas even simple additions to passively using storage are able to generate benefits under electricity price uncertainty (Milis and Peremans, 2015). Operation scenarios and the decision/timing of electricity selling to the main grid are subject to optimization, and each of them captures one variable that can drive comparisons between MGs.

To summarize, the current knowledge on economies of scope in the electricity sector presents a research gap when it comes to microgrids, which gives rise to our research question “Are there economies of scope in the case of microgrids?”

4 Executed Tests and Experiments

The six scenarios for the 24–hour tests conducted at the CRES premises were agreed upon beforehand as follows:

- Grid-connected, heavy load, buy-priority
- Grid-connected, heavy load, sell-priority
- Grid-connected, light load, buy-priority
- Grid-connected, light load, sell-priority
- Island mode, heavy load
- Island mode, light load

Overall, these scenarios make use of the same physical and simulated power components setup and they vary in terms of the selected control parameters and load profile input data.

4.1 Test Plan

Interest of the research team consists in a typical day-to-day operation of a MG, as close to real-life conditions as possible, so as to enable relevant economic conclusions. Therefore the requirements for the tests were

1. 24h-long loops of operation
2. Residential load profile
3. At least one islanded mode and at least one grid-connected mode
4. Use of the diesel generator

To this end, scenarios described above were specified by the modification of the proper parameters. Each scenario was configured prior to the execution of each test in a preset Matlab/Simulink model. Thus, during my stay the execution of the tests was commenced from the first day, while during the execution an on-line assessment of results was done in order to spot potential issues in the models used or apply some improvements to the procedure. Due to the rather short duration of my stay, the tests were continued and completed after my departure from CRES.

4.2 Standards, Procedures, and Methodology

The methodology used for the modelling of the PV generator parts of the setup is summarised below:

<u>PV panels</u>: The first and foremost part of the tests is the model for emulating the behaviour of PV panels. Among various models for modelling the I-V characteristic of PVs the interpolated model (Khouzam and Hoffmann, 1996) was selected. In this approach, the current or the voltage of a symmetrically operated PV module is described by the following equation set:

$$I = I_{SC}\left[1 - C_1\left(exp\left(\frac{V_R}{C_2 V_{oc}}\right) - 1\right)\right] + D_I \quad (1)$$

$$V = C_2 V_{oc} ln\left(\frac{1 - (I - D_I)/I_{sc}}{C_1} + 1\right) - C_{TV}\left(T - T_{ref}\right) - R_S D_I \quad (2)$$

where:

$$C_1 = \left(1 - \frac{I_{mp}}{I_{sc}}\right) exp\left(-\frac{V_{mp}}{C_2 V_{oc}}\right) \quad (3)$$

$$C_2 = \left(\frac{V_{mp}}{V_{oc}} - 1\right) \Big/ ln\left(1 - \frac{I_{mp}}{I_{sc}}\right) \tag{4}$$

$$D_I = C_{TI}\frac{G}{1000}\left(T - T_{ref}\right) + I_{sc}\left(\frac{G}{1000} - 1\right) \tag{5}$$

$$V_R = V + C_{TV}\left(T - T_{ref}\right) + R_S D_I \tag{6}$$

MPPT algorithm: The method used for implementing the specific block was the P&O method Hohm and Ropp, 2003). This algorithm is the most commonly used method in PV inverters and is based on the perturbation of the voltage and the observation of the resulting power deviation. Depending on the change of power the algorithm infers if the system moves to or away from the maximum point of operation. In the following figures (Figure 1 and Figure 2) the operating principle of the P&O method together with the flowchart implementation diagram are shown.

PV inverter: The model selected and used for the PV inverters of the system takes into account the energy efficiency of the inverter only. In this respect, the model used for the inverter efficiency was a lookup table with two input signals, such as the DC voltage and the input power. Based on the combination of the two inputs one efficiency value is selected from the table and multiplied by the input power in order to calculate the power injected to the AC grid. The specific implementation is shown in section **Error! Reference source not found.**.

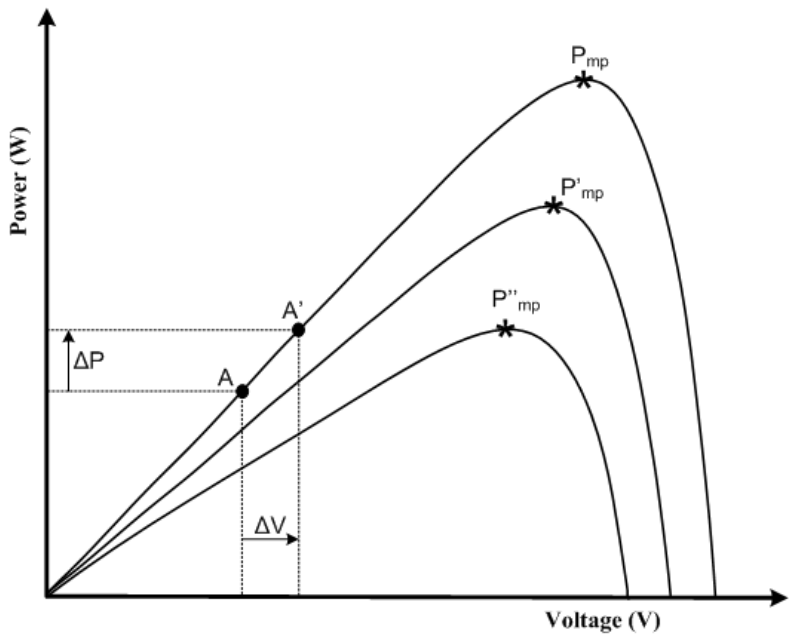

Figure 1 Operating principle of the implemented P&O method

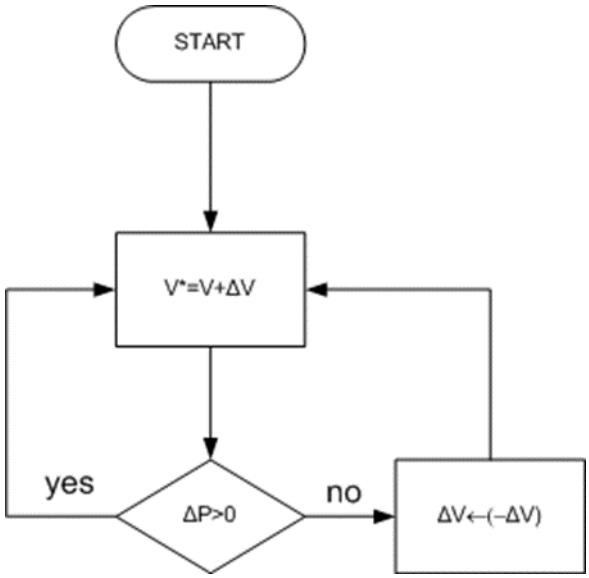

Figure 2 Flowchart of the implemented P&O method

Calculation of direct and diffuse from global horizontal irradiance: Due to the fact that the input irradiance data in all tests consists of the global horizontal value, an extra calculation block that converts the specific value to the corresponding direct and diffuse components was implemented. This block makes use of the following calculation for the diffuse irradiance (Iqbal, 1993):

$$\frac{I_d}{I} = \begin{cases} 1 - 0.09M_T\,, & 0 \le M_T \le 0.22 \\ 0.9511 - 0.1604M_T + 4.388M_T^2 - 16.638M_T^3 + 12.336M_T^4\,, & 0.22 \le M_T \le 0.80 \\ 0.165, & 0.80 \le M_T \end{cases} \quad (7)$$

$$M_T = \frac{I}{I_0} \quad (8)$$

Where I is the global horizontal irradiance and I_0 is calculated by the formula:

$$I_0 = I_{SC}E_0(sin\delta sin\varphi + cos\delta cos\varphi cos\omega) \quad (9)$$

Where I_{SC}=1367W/m^2, and E_0 is the eccentricity correction factor given by:

$$E_0 = 1 + 0.33cos\left(\frac{2\pi d_n}{365}\right) \quad (10)$$

Calculation of plane irradiance and PV surface temperature: For the conversion of the horizontal level irradiance data to the plane irradiance, the following mathematical formulation was used:

$$I_{b\beta\gamma} = I_b\left(\frac{\cos\theta}{cos\theta_z}\right) \quad (10)$$

$$cos\theta_Z = sin\delta sin\varphi + cos\delta cos\varphi cos\omega = sina \quad (11)$$

$$\theta = \theta_z - \beta \tag{12}$$

$$I_r = \frac{1}{2} I\rho(1 - cos\beta)\left[1 + sin^2\left(\frac{\theta_z}{2}\right)\right](|cos\Delta|) \tag{13}$$

$$I_s = I_d\left[\left(\frac{I_b}{I_0}\right)\left(\frac{cos\theta}{cos\theta_z}\right) + \frac{1}{2}(1 + cos\beta)\left(1 - \frac{I_b}{I_0}\right)\right] \tag{14}$$

$$I_{inclined} = I_{b\beta\gamma} + I_r + I_s \tag{15}$$

Where δ is the solar declination angle given by:

$$\delta = sin^{-1}\left(sin\left(\frac{23.442\pi}{180^o}\right)sin(4.901 + 0.033sin(-0.031 + \Gamma) + \Gamma)\right) \tag{16}$$

Γ is the day angle in radians given by:

$$\Gamma = \frac{2\pi(d_n - 1)}{365} \tag{17}$$

d_n is the day number of the year ranging from 1 for January 1st to 365 for December 31st , φ is the geographical latitude in degrees (north positive), and ω is the hour angle (15º/hour, noon zero and morning positive). The angle ω corresponds to the actual time of the site defined by the formulas:

$$E_t = \frac{4\pi}{180^o} tan^{-1}\left(\frac{tan(4.901 + \Gamma) - cos\left(\frac{23.442\pi}{180^o}\right)tan(4.901 + 0.033sin(-0.031 + \Gamma) + \Gamma)}{tan(4.901 + \Gamma)cos\left(\frac{23.442\pi}{180^o}\right)tan(4.901 + 0.033sin(-0.031 + \Gamma) + \Gamma) + 1}\right) \tag{18}$$

$$LAT = LST + E_t + 4(L_s - L_e) \tag{19}$$

Where E_t is the equation of time, LAT is the Local Apparent Time, LST is the Local Standard Time, L_s is the standard longitude and L_e is the local longitude for the place of calculation. Finally, β is the inclination angle of the PV panel and ρ is the ground albedo (both are constants).

<u>Power controller</u>: The control part that specifies also each scenario of the tests makes use of the power values for the PV and the loads. Based on the net imbalance of the two quantities and according to the selected scenario the battery inverter setpoint is determined as follows:

Buy-priority:

$$P_{bat-setpoint} = \begin{cases} 0, & P_{PV} < P_{Load} \\ P_{Load} - P_{PV}, & P_{PV} > P_{Load} \end{cases} \tag{20}$$

Sell-priority:

$$P_{bat-setpoint} = \begin{cases} 0, & P_{PV} > P_{Load} \\ P_{Load} - P_{PV}, & P_{PV} < P_{Load} \end{cases} \tag{21}$$

Islanded operation:

$$P_{bat-setpoint} = P_{Load} - P_{PV} \tag{22}$$

In the above formulas it is implied that the battery absorbs power when the setpoint is negative and produces when positive.

Diesel generator: The specific component was emulated during the experiments by the grid interconnection. The aspect of interest of the diesel generator for the islanded tests is the fuel consumption. Therefore, during the post-processing of the test results the power consumed from the grid was connected to a fuel consumption which corresponds to the actual operational characteristics of the CRES' diesel generator. This fuel consumption follows an exponential decay as a function of the electrical power and has the following form:

$$F_{cons}(P_{dies.}) = A_1 e^{-\frac{P_{dies}}{t_1}} + A_2 e^{-\frac{P_{dies}}{t_2}} + F_0 \tag{20}$$

Based on measurements conducted on the actual diesel generator the approximation of the curve is shown in the following diagram (Figure 3).

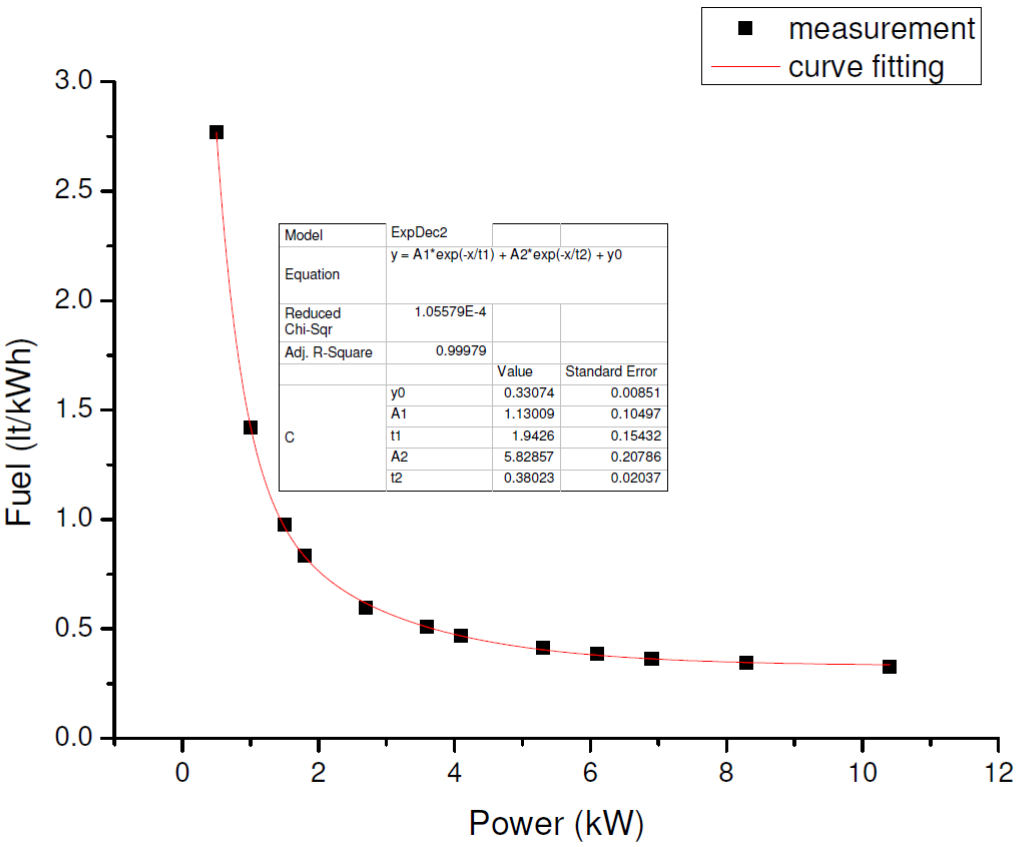

Figure 3 Fuel consumption profile for the actual diesel generator

4.3 Test Set-up(s)

The specific test was implemented based on the diagrams shown below (Figure 4 and Figure 5). The diagram in Figure 4 shows the hardware setup for the specific experiment. This configuration includes the following parts of the microgrid:

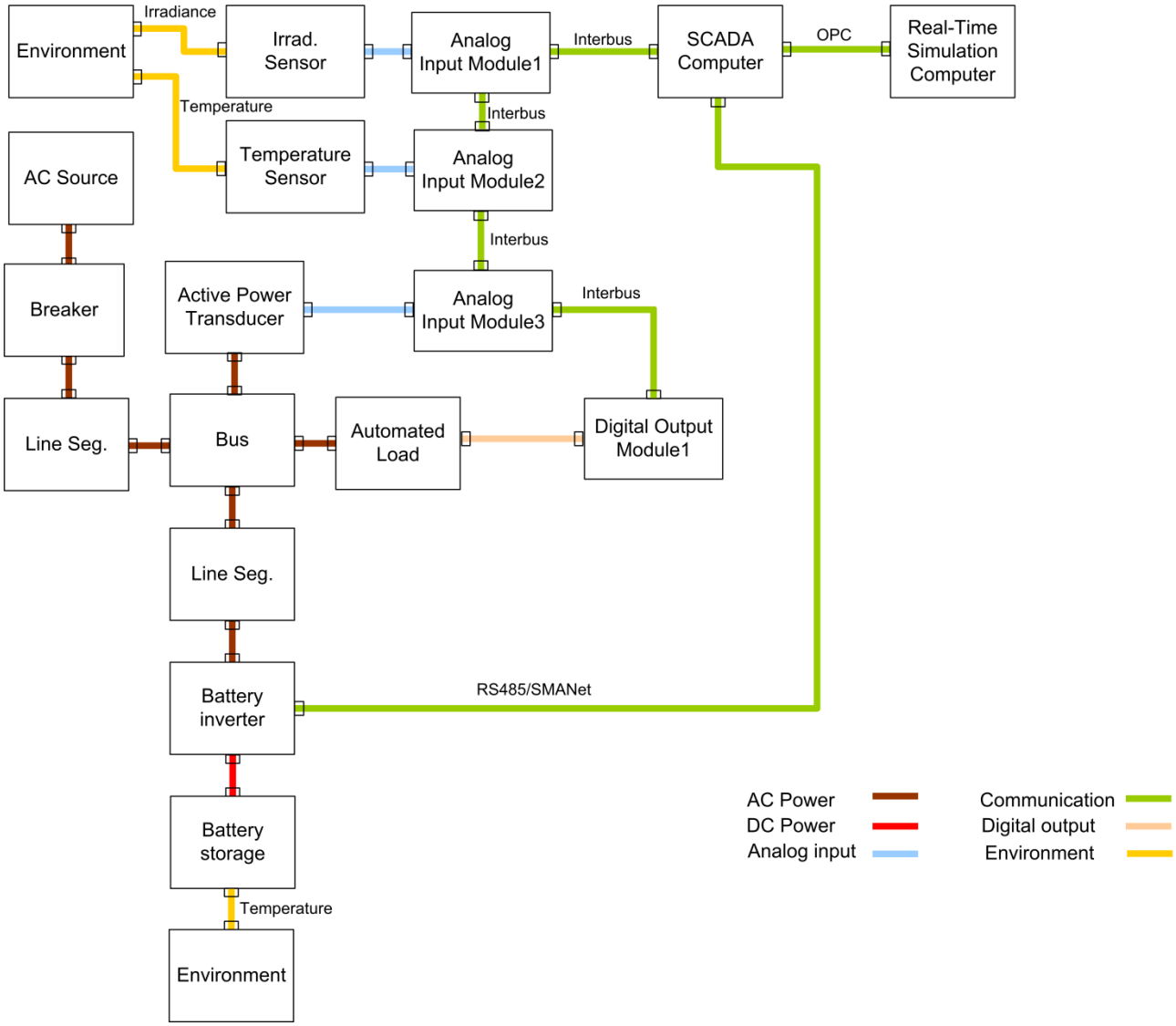

Figure 4 Experimental setup showing the hardware interconnections of the used components

-One AC source, namely the AC LV grid of CRES
-One breaker which connects the microgrid to the public utility
-Two line segment for the connection of loads to the microgrid and to the battery inverter
-One busbar upon which loads and transducers are connected
-One automated load bank consisting of resistive loads (4.5kW per phase)
-One active power transducer for monitoring and recording the actual load power
-One irradiance sensor positioned on a horizontal level
-One ambient temperature sensor
-One battery bank
-One single-phase battery inverter
-Three Interbus Analog Input modules for the signals' monitoring
-One Interbus Digital Output module for the load control
-The microgrid's SCADA system
-One computer used as the real-time simulator

Regarding the latter, the analytical block diagram in Figure 5 shows the blocks used for the simulation implementation. The simulink model of the test is shown in Figure 6. Also, the implementation of the global to direct and diffuse irradiance calculation is shown in Figure 7. The conversion of horizontal to inclined-surface irradiance is obtained by means of the Simulink model

of Figure 8. Finally, the implementation of the battery controller is shown is Figure 9.

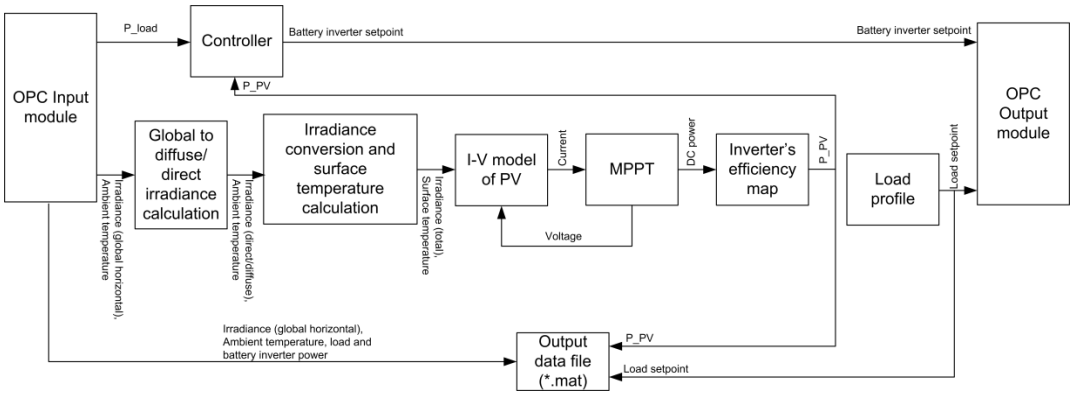

Figure 5 Implementation block diagram for the simulation parts

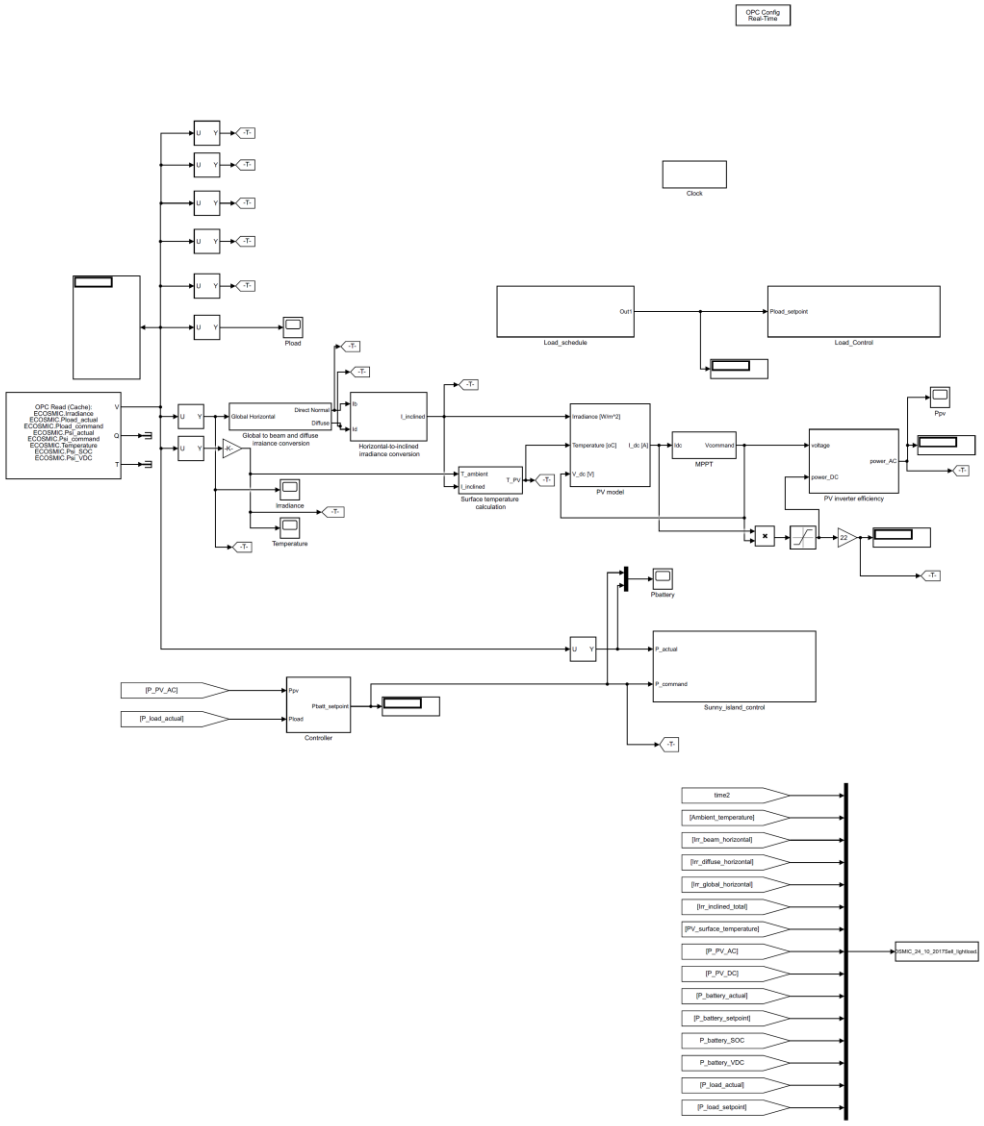

Figure 6 Simulink block diagram for the real-time simulation model

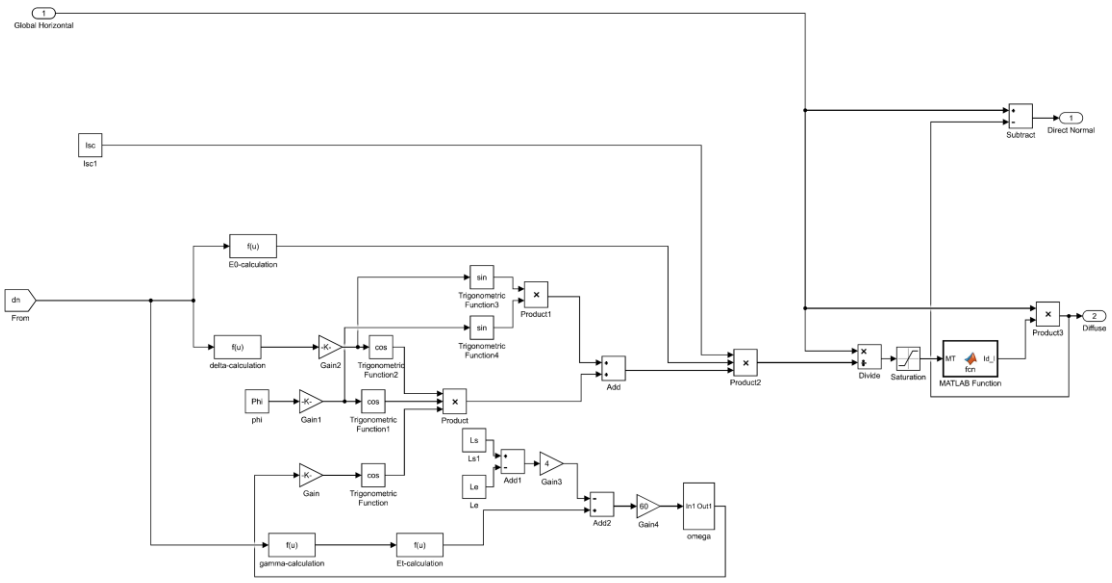

Figure 7 Simulink implementation of the conversion from global to direct and diffuse irradiance

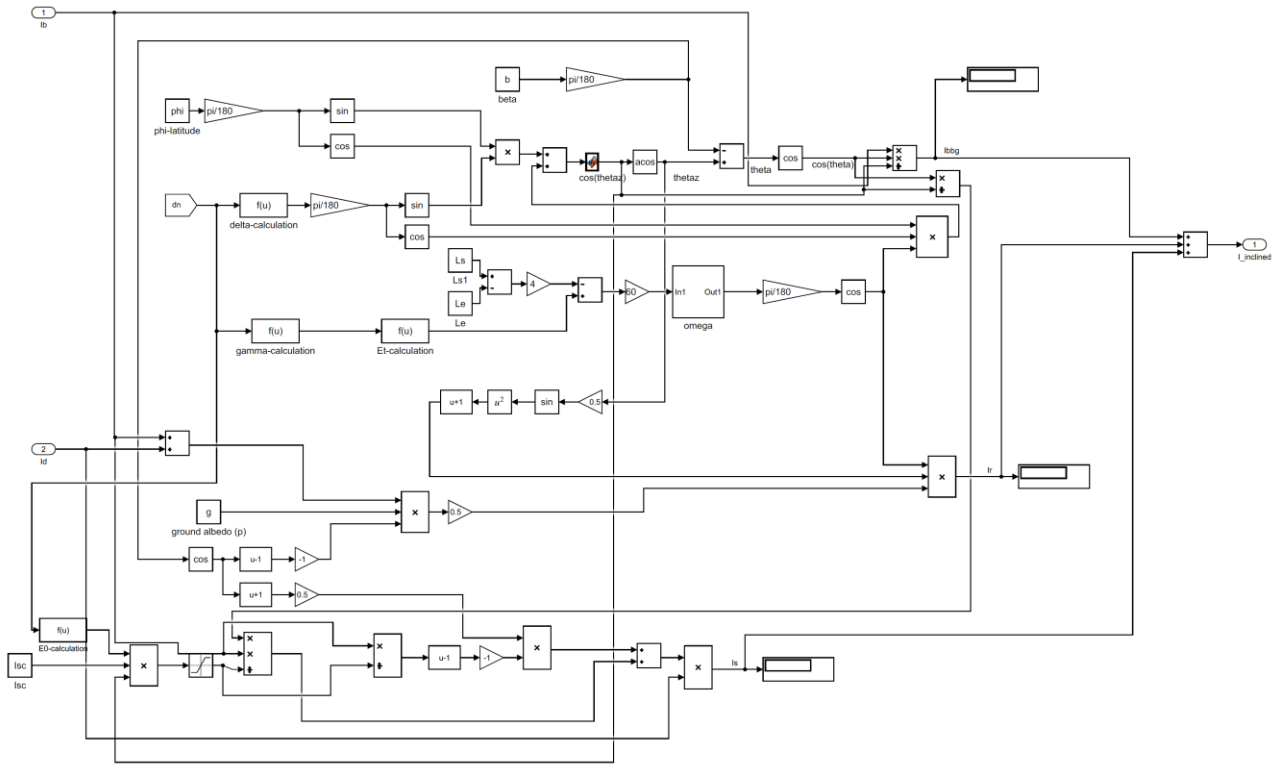

Figure 8 Simulink implementation of the conversion from horizontal to inclined surface irradiance

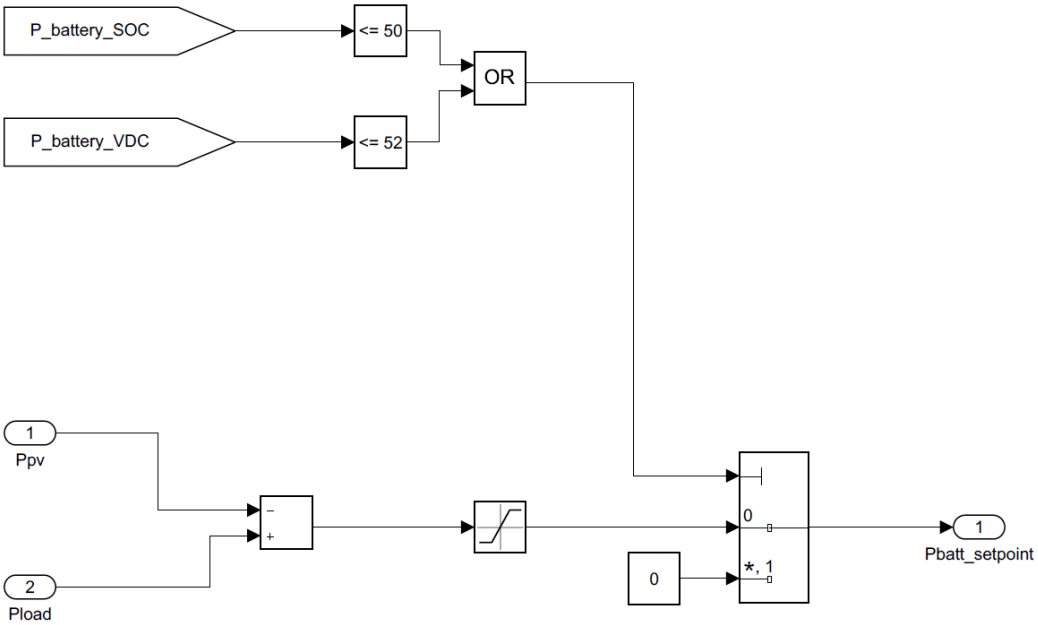

Figure 9 Simulink implementation of the battery controller

4.4 Data Management and Processing

Experimental output data was recorded in Matlab (*.mat) and shared via Dropbox for post-processing. Economic data was recorded in HOMER and in a descriptive log file to allow comments and notes.

5 Results and Conclusions

Preliminary assessment of the data shows that

1. This particular MG would be profitable in a real-life environment (NPC negative), which is not surprising given the age of the equipment – as per HOMER
2. The operation data from the scenarios shows at the first sight that for the geographical and economic conditions of Greece the use of PV with storage units is technically reliable even with old (obsolete) equipment, which suggests long-term opportunities for PV-based MGs and makes for a relevant base of comparison with similar MGs in other countries.

Final results of the TA will include data from all four visits and a comparative analysis.

6 Open Issues and Suggestions for Improvements

The scenarios have been operated by CRES via Matlab/Simulink and have run according to plan, in spite of small impediments typical for lengthy experiments, which demanded at some points to restart parts of the simulation.

7 Dissemination Planning

User Group is considering publishing these results in open-access journals such as Energies and to disseminate them at academic workshops and conferences.
The results of this work will also be used in the courses taught on ‘Energy economics’ and 'Electricity economics’ at the Applied Economics faculty of Universiteit Antwerpen.
Individual dissemination methods can include individual e-mails, blogs, newsletters, policy briefs.

8 References

Abdilahi, A. M., Yatim, A. H. M., Mustafa, M. W., Khalaf, O. T., Shumran, A. F. and Nor, F. M. (2014): “Feasibility study of renewable energy-based microgrid system in Somaliland's urban centers”, Renewable and Sustainable Energy Reviews 40: 1048–59.

Hohm, D. P. and Ropp, M. E.: “Comparative study of Maximum Power Point Tracking Algorithms”, Progr. Photovolt: Res. Appl., vol. 11, pp. 47-62, 2003

Iqbal, M.: “An introduction to solar radiation”, Don Mills, Ontario: Academic Press Canada, 1983.

Kaldellis, J. K., Zafirakis, D., and Kavadias, K. (2007): „Techno-economic comparison of energy storage systems for island autonomous electrical networks“, Renewable and Sustainable Energy Reviews 13: 378-92

Khouzam, K. and Hoffman, K.: "Real-Time Simulation of Photovoltaic Modules," Solar Energy, vol. 56, no. 6, pp. 521-526, 1996

Kobayakawa, K. and Kandpal, T. C. (2014): “A techno-economic optimization of decentralized renewable energy systems: Trade-off between financial viability and affordability—A case study of rural India”, Energy for Sustainable Development 23: 92–98.

Lee, M., Shaw, G. C., and Modi, V. (2014): “Battery Storage: Comparing Shared to Individually Owned Storage Given Rural Demand Roles of a Cluster of Customers", IEEE 2014 Global Humanitarian Technology Conference, Seattle: 200-06.

Milis, K. and Peremans, H. (2015): “Economical Optimization Of Microgrids: A Non-Causal Model", ASME 2015, 9th International Conference on Energy Sustainability, ES2015, San Diego, California

Mohammadi, M., Hosseinian, S. H., and Gharehpetian, G. B. (2012): “GA-based optimal sizing of microgrid and DG units under pool and hybrid electricity markets”, Electrical Power and Energy Systems 35: 83-92.

Sigarichan, S. G., Paleta, R., Malmquist, A. and Pina, A. (2015): “Feasibility study of using a biogas engine as backup in a decentralized hybrid (PV/wind/battery) power generation system e Case study Kenya”, Energy 90: 1830-41.

European Research Infrastructure supporting Smart Grid Systems Technology Development, Validation and Roll Out

Technical Report TA User Project

ECOSMIC, pt 2/4

Grant Agreement No:	**654113**
Funding Instrument:	**Research and Innovation Actions (RIA) – Integrating Activity (IA)**
Funded under:	**INFRAIA-1-2014/2015: Integrating and opening existing national and regional research infrastructures of European interest**
Starting date of project:	**01.11.2015**
Project Duration:	**54 month**

Contractual delivery date:	**Jan 2018**
Actual delivery date:	**22 Jan 2018**
Name of lead beneficiary for this deliverable:	**Herbert Peremans and Steven van Passel, Univeristy of Antwerp, Belgium**
Deliverable Type:	**Other (O)**
Security Class:	**Confidential, only for members of the consortium (including the Commission Services) (CO)**
Revision / Status:	**draft**

Project co-funded by the European Commission within the H2020 Programme (2014-2020)

Document Information

Document Version: 1

Revision / Status: draft

All Authors/Partners Iolanda Saviuc

Distribution List RSE

Document History

Revision	Content / Changes	Resp. Partner	Date
[Rev. No]	[Short description of document changes]	[Partner Short Name]	DD.MM.YY
[Rev. No]	[Short description of document changes]	[Partner Short Name]	DD.MM.YY
[Rev. No]	[Short description of document changes]	[Partner Short Name]	DD.MM.YY

Document Approval

Final Approval	Name	Resp. Partner	Date
[Review Task Level]	[Given Name + Name]	[Partner Short Name]	DD.MM.YY
[Review WP Level]	[Given Name + Name]	[Partner Short Name]	DD.MM.YY
[Review Steering Com. Level]	[Given Name + Name]	[Partner Short Name]	DD.MM.YY

Disclaimer

Copyright Notice

Table of contents

Abbreviations

CapEx	Capital Expenditures
CHP	Combined Heat and Power
COE	Cost of Energy
DER	Distributed Energy Resource
ECOSMIC	Economic Assessment of Microgrids
GHI	Global Horizontal Irradiance
IRR	Internal Rate of Return
MG	Microgrid
MSP	Minimum Selling Price
NPC	Net Present Cost
NPV	Net Present Value
OpEx	Operational Expenditures
PBP	Payback Period
P&O	Perturb and Observe
RSE	Ricerca sul Sistema Energetico
SoC	State of Charge
TA	Trans-national Access
TEA	Techno-Economic Analysis
UA	University of Antwerpv

Executive Summary

The TA visit of ECOSMIC representative Iolanda Saviuc at RSE took place between the 10th and the 16th of December 2017. The visit had been prepared during the weeks before traveling via email and document exchange as well as a web conference between RSE and ECOSMIC representatives.

Objective of the TA visit was designed to be twofold. First, collecting economic data about the components of the experimental MG on the RSE premises; second, performing a series of experiments and collecting output data on the proportion of energy sources that meet the load.

The MG components were presented in a tour of the premises upon arrival on the first day. All the pieces of information learned during the tour were logged into a detailed descriptive table, and then built into a draft HOMER model of the MG. The model was then perfected through a targeted interview with the RSE representative Maurizio Verga. Filling out the required fields in the HOMER software for a valid model ensured indirectly a comprehensive collection of economic data (i.e. making sure no relevant information is forgotten). Output of the HOMER software are first economic assessments of the MG (calculates NPV, COE, etc). The following components have been registered and used:

1. Load: residential load modelled to be typical for the Milan region on a day in January, and another one for a day in July
2. PV unit emulated by the DC grid on RSE premises, summer profile (26kWh) and winter profile (ca 15kWh)
3. CHP unit used to balance the load, powered by natural gas.
4. Li-Ion battery storage: 32 kWh
5. Battery inverter: 32.7 kVA

In addition to the main components, an additional storage unit was included in stand-by for safety reasons.
Data about the operation of the MG has been collected by running 4 scenarios of 24 hours each, all in island mode, at the RSE premises. The scenarios, which were agreed upon beforehand, were as follows:

1. Summer generation, summer load profile, with base load
2. Summer generation, summer load profile, no base load
3. Winter generation, winter load profile, with base load
4. Winter generation, winter load profile, no base load

The scenarios were modelled by RSE in LabView and operated in SCADA and have run according to plan, in spite of impediments typical for lengthy experiments, which demanded at some points to restart parts of the simulation.

Preliminary assessment of the data shows that:

1. This particular MG would be profitable in a real-life environment (NPC negative)
2. For the geographical and economic conditions of Italy the use of PV with storage units is technically reliable in island mode

Further research involves a TEA analysis of the MG visited at RSE; a broader evaluation of the Italian case based on the academic literature; comparison with other three MGs in Europe. This research will be possible after the completion of all four TA visits foreseen in the project proposal.

1 General Information of the User Project

User Project	
User Project acronym	ECOSMIC
User Project title	Developing and Evaluating an Economic Assessment Framework for Microgrids -- Based on the Concept of Economies of Scope
Main scientific/technical field	Microgrids
Keywords	DER, Microgrids, Techno-economic assessment, comparability

Leader of the User Group	
Name	Herbert Peremans and Steven van Passel
Phone	+ 32 326 54 670
E-mail address	herbert.peremans@uantwerpen.be; steven.vanpassel@uantwerpen.be
Phone	+32 326 54 895
Nationality	Belgian
Gender	M
Age	
Organization name	Department Engineering Management (ENM), University of Antwerp
Organization address	Prinsstraat 13, 2000 Antwerpen, Belgium
Organization website	www.uantwerpen.be
Position in organization	Gewoon Hoogleraar and Hoofddocent, respectively
Activity type and legal status of organization	Higher Education Institution

Members of the User Group	
Name	Iolanda Saviuc
Phone	+32 485 089 139
E-mail address	iolanda.saviuc@uantwerpen.be
Nationality	Romanian
Gender	F
Age	32
Organization name	Department Engineering Management (ENM), University of Antwerp
Organization address	Prinsstraat 13, 2000 Antwerpen, Belgium
Organization website	www.uantwerpen.be

Position in organization	PhD student
Activity type and legal status of organization	Higher Education Institution

Host Infrastructure	
Name of the Infrastructure/ Installation	Distributed Energy Resources Test Facility (RSEDER-TF)
Location	Ricerca sul Sistema Energetico – RSE S.p.A.
Web Site	www.rse-web.it
Access Period	10.12.2017 – 15.12.2017

Research Motivation

As part of my PhD research at the University of Antwerp (BE) supervised by my promotors, Prof. Steven Van Passel and Prof. Herbert Peremans, I am developing a framework for the economic assessment of microgrids (MGs), based on the concept of economies of scope.

In order to achieve that, I propose analyzing the shortcomings of conventional methods, of which the most popular one is the TEA. Until now, MGs are being evaluated case-by-case with the conventional tools of techno-economic analysis (TEA), such as net present value NPV, internal rate of return IRR, etc – whereas a conceptually based framework would be more broadly applicable and would provide a new benchmark for comparability.

The output of a TEA uses CapEx, OpEx and revenues to provide metrics such as: payback period PBP, net present value NPV, internal rate of return IRR, minimum selling price MSP. The probabilistic distribution of these indicators together with the sensitivity analyses, provide insight on the impact of variable MG configurations, and they constitute the main rationale of my application.

This project will perform, via TA with ERIGrid, a series of TEAs on various MG configurations. We hereby aim at a broad range of technology mixes, MG sizes, operating conditions etc. to derive reliable estimates for the parameters used in the general conceptual framework

1.1 Objectives

The TA project of ERIGrid provides the opportunity to a) assess multiple scenarios in the same MG location, and b) compare performances of different MGs in similar scenarios. In addition to the economic data my project will have to take into account specifics of the respective country's energy policy, as it has direct impact on prices of equipment, electricity, CO2.
The input data for the TEA (equipment, quantities, output prices), would be collected by means of interviews and surveys at the respective facilities and by observation of different operation scenarios (i.e. different loads/ load profiles with ongoing experiments, etc.).

Expected outcome of the research stay is a TEA report of the respective MG. The scientific contribution of the research lies with studying the method in action and is twofold: it is an expansion on currently available assessment methods (by enabling comparisons) and it helps develop a new, conceptual, assessment framework

1.2 Scope

In the case of the first visit at RSE following pieces of equipment were used:

1. Load: residential load modelled to be typical for the Milan region on a day in January, and another one for a day in July. Load variation in steps of 1kWh per time step
2. PV unit emulated by the DC grid on RSE premises, summer profile (26kWh) and winter profile (ca 15kWh)
3. CHP unit used to balance the load, powered by natural gas
4. Li-Ion battery storage: 32 kWh
5. Battery inverter: 32.7 kVA

In addition to the main components, an additional storage unit was included in stand-by for safety reasons.

Data about the operation of the MG has been collected by running 4 scenarios of 24 hours each, all in island mode, at the RSE premises. The scenarios, which were agreed upon beforehand, were as follows:

1. Summer generation, summer load profile, with base load
2. Summer generation, summer load profile, no base load

3. Winter generation, winter load profile, with base load
4. Winter generation, winter load profile, no base load

For each scenario, the initial SoC of the battery was recorded.
Output data of the MG operation consisted of files containing

1. The power flow to and from the battery
2. The power output of the CHP acting as a balancing generator in the islanded mode

The data was recorded in time steps of 2 and 10 minutes respectively.

Economic data that was recorded referred to

1. Equipment: model, brand, year of acquisition, price of acquisition (without VAT and disregarding any discounts)
2. Installation costs: wires, switches and main boards for a residential installation as estimated by the RSE experts.
3. Fuel price
4. Electricity price at the main grid, as well as the components of the electricity price

2 State-of-the-Art

Economic and techno-economic assessment of MGs has received significant attention in the academic research of the past decade. A literature survey conducted in ScienceDirect and IEEE about TEA of MGs reveals ca. 100 journal articles and conference papers published between 2008 and 2017 (none existing before 2008). Most of these works focus on either the TEA of adding/changing a component in an existing MG – an ESS (Kaldellis, 2007) or a biogas engine (Sigarchian et al., 2015) – or the use TEA for solving the problem of MG sizing in the planning stage (Kobayakawa and Kandpal, 2014; Mohammadi, Hosseinian and Gharehpetian, 2012).

Another characteristic which the vast majority of the papers have in common is that they focus on one case study, presenting reports such as “Feasibility study of renewable energy-based microgrid system in Somaliland's urban centers” (Abdilahi et al., 2014). While this approach delivers valuable insight into a selected local landscape and exemplifies the use of the method, it stops short of making comparisons possible between different settings /configurations/countries. This has to do inherently with the specifics of a TEA metrics and the limitation to case-by-case evaluation. To the best of our knowledge, a comparison between indicators in different scenarios/different countries/different sizes is yet to be carried out.

Other notable approaches in economic assessment of MGs aim at the optimization of operation costs alone. For example, shared storage drives cost advantage of MGs (Lee, Shaw, and Modi, 2014), whereas even simple additions to passively using storage are able to generate benefits under electricity price uncertainty (Milis and Peremans, 2015). Operation scenarios and the decision/timing of electricity selling to the main grid are subject to optimization, and each of them captures one variable that can drive comparisons between MGs.

3 Executed Tests and Experiments

The four scenarios for the 24–hour tests conducted at the RSE premises were agreed upon beforehand as follows:

1. Summer generation, summer load profile, with base load
2. Summer generation, summer load profile, no base load
3. Winter generation, winter load profile, with base load
4. Winter generation, winter load profile, no base load

Overall, these scenarios make use of the same physical and simulated power components setup and they vary in terms of the selected control parameters and load profile input data.

3.1 Test Plan

Interest of the research team consists in a typical day-to-day operation of a MG, as close to real-life conditions as possible, so as to enable relevant economic conclusions. Therefore the requirements for the tests were

1. 24h-long loops of operation
2. Residential load profile
3. Islanded mode
4. Use of the CHP as diesel generator

To this end, scenarios described above were specified by the modification of the proper parameters. Each scenario was configured prior to the execution of each test in a preset Matlab/Simulink model. Thus, during my stay the execution of the tests was commenced from the first day, while during the execution an on-line assessment of results was done in order to spot potential issues in the models used or apply some improvements to the procedure. Due to the rather short duration of my stay, the tests were continued and completed after my departure from RSE.

3.2 Standards, Procedures, and Methodology

RSE experts have employed the standards and operations procedures that are used at the facility. The operation method of the MG was primarily driven by safety precautions and the PID controller would foresee the interruption of operation in every case of imbalance in the grid, discharge of the battery below the minimum SoC, or any other abnormalities.

3.3 Test Set-up(s)

The objective of the tests was to run 24h-loops in a simple set-up:
Residential load in Milan environment to be met by a PV unit and a storage unit in islanded mode, balanced by a CHP acting as a balancing generator.
The operation strategy was to meet the load with the PV generation as follows:

1. in case the load was higher than the PV generation, then the battery storage was employed until the battery reached the minimum SoC (ultimately set at 20%). When the battery was discharged the CHP was used to supply the needed electricity.
2. In case there was more electricity generated than the load, then the excess electricity was stored until the Li-Ion battery would meet the maximum SoC (ultimately set at 95%). After the battery would reach maximum SoC, the excess electricity would be used by the CHP to produce heat.

Hence, the CHP would behave effectively as connection to the main grid and could be modelled as such in HOMER.

3.4 Data Management and Processing

Experimental output data was recorded in Excel (*.xls) and shared via email for post-processing. Economic data was recorded in HOMER and in a descriptive log file to allow comments and notes. For the modelling of the MG in HOMER, RSE experts have also provided feedback.

Results and Conclusions

Results of the test were a descriptive set of data with the recorded behaviour of the battery storage and of the CHP unit under the four scenarios. It is now possible to account for each time step in the four 24h-loops and identify the corresponding load size and the sources that have met the load, as well as the proportion.

Preliminary assessment of the data shows that:

1. This particular MG would be profitable in a real-life environment (NPC negative)
2. For the geographical and economic conditions of Italy the use of PV with storage units is technically reliable in island mode

Further research involves a TEA analysis of the MG visited at RSE; a broader evaluation of the Italian case based on the academic literature; comparison with other three MGs in Europe. This research will be possible after the completion of all four TA visits foreseen in the project proposal.

4 Open Issues and Suggestions for Improvements

The scenarios have run according to plan, in spite of impediments typical for lengthy experiments, which demanded at some points to restart parts of the simulation.

5 Dissemination Planning

User Group is considering publishing these results in open-access journals such as Energies and to disseminate them at academic workshops and conferences.
The results of this work will also be used in the courses taught on ‘Energy economics’ and 'Electricity economics’ at the Applied Economics faculty of Universiteit Antwerpen.
Individual dissemination methods can include individual e-mails, blogs, newsletters, policy briefs

6 References

Abdilahi, A. M., Yatim, A. H. M., Mustafa, M. W., Khalaf, O. T., Shumran, A. F. and Nor, F. M. (2014): “Feasibility study of renewable energy-based microgrid system in Somaliland's urban centers”, Renewable and Sustainable Energy Reviews 40: 1048–59.

Kaldellis, J. K., Zafirakis, D., and Kavadias, K. (2007): „Techno-economic comparison of energy storage systems for island autonomous electrical networks“, Renewable and Sustainable Energy Reviews 13: 378-92

Kobayakawa, K. and Kandpal, T. C. (2014): “A techno-economic optimization of decentralized renewable energy systems: Trade-off between financial viability and affordability—A case study of rural India”, Energy for Sustainable Development 23: 92–98.

Lee, M., Shaw, G. C., and Modi, V. (2014): “Battery Storage: Comparing Shared to Individually Owned Storage Given Rural Demand Roles of a Cluster of Customers", IEEE 2014 Global Humanitarian Technology Conference, Seattle: 200-06.

Milis, K. and Peremans, H. (2015): “Economical Optimization Of Microgrids: A Non-Causal Model", ASME 2015, 9th International Conference on Energy Sustainability, ES2015, San Diego, California

Mohammadi, M., Hosseinian, S. H., and Gharehpetian, G. B. (2012): “GA-based optimal sizing of microgrid and DG units under pool and hybrid electricity markets”, Electrical Power and Energy Systems 35: 83-92.

Sigarichan, S. G., Paleta, R., Malmquist, A. and Pina, A. (2015): “Feasibility study of using a biogas engine as backup in a decentralized hybrid (PV/wind/battery) power generation system e Case study Kenya”, Energy 90: 1830-41.

European Research Infrastructure supporting Smart Grid Systems Technology Development, Validation and Roll Out

Technical Report TA User Project

ECOSMIC, pt 3/4

Grant Agreement No:	**654113**
Funding Instrument:	**Research and Innovation Actions (RIA) – Integrating Activity (IA)**
Funded under:	**INFRAIA-1-2014/2015: Integrating and opening existing national and regional research infrastructures of European interest**
Starting date of project:	**01.11.2015**
Project Duration:	**54 month**

Contractual delivery date:	**Feb 2018**
Actual delivery date:	**26 Feb 2018**
Name of lead beneficiary for this deliverable:	**Herbert Peremans and Steven van Passel, Univeristy of Antwerp, Belgium**
Deliverable Type:	**Other (O)**
Security Class:	**Confidential, only for members of the consortium (including the Commission Services) (CO)**
Revision / Status:	**draft**

Project co-funded by the European Commission within the H2020 Programme (2014-2020)

Document Information

Document Version: 1

Revision / Status: draft

All Authors/Partners Iolanda Saviuc

Distribution List DTU/ SYSLAB

Document History

Revision	Content / Changes	Resp. Partner	Date
[Rev. No]	[Short description of document changes]	[Partner Short Name]	DD.MM.YY
[Rev. No]	[Short description of document changes]	[Partner Short Name]	DD.MM.YY
[Rev. No]	[Short description of document changes]	[Partner Short Name]	DD.MM.YY

Document Approval

Final Approval	Name	Resp. Partner	Date
[Review Task Level]	[Given Name + Name]	[Partner Short Name]	DD.MM.YY
[Review WP Level]	[Given Name + Name]	[Partner Short Name]	DD.MM.YY
[Review Steering Com. Level]	[Given Name + Name]	[Partner Short Name]	DD.MM.YY

Disclaimer

Copyright Notice

Table of contents

Abbreviations

CapEx	Capital Expenditures
COE	Cost of Energy
DER	Distributed Energy Resource
DTU	Danish Technical University
ECOSMIC	Economic Assessment of Microgrids
IRR	Internal Rate of Return
MG	Microgrid
MSP	Minimum Selling Price
NPC	Net Present Cost
NPV	Net Present Value
OpEx	Operational Expenditures
PBP	Payback Period
SoC	State of Charge
TA	Trans-national Access
TEA	Techno-Economic Analysis
UA	University of Antwerp

Executive Summary

The TA visit of ECOSMIC representative Iolanda Saviuc at DTU took place between the 22nd and the 26th of January 2018. The visit had been prepared during the weeks before traveling via email and document exchange as well as a web conference between DTU and ECOSMIC representatives.

Objective of the TA visit was designed to be twofold. First, collecting economic data about the components of the experimental MG on the RSE premises; second, performing a series of experiments and collecting output data on the proportion of energy sources that meet the load.

The MG components were presented in a tour of the premises upon arrival on the first day. All the pieces of information learned during the tour were logged into a detailed descriptive table, and then built into a draft HOMER model of the MG. The model was then complemented with economic data through a targeted interview with the DTU representative. Filling out the required fields in the HOMER software for a valid model ensured indirectly a comprehensive collection of economic data (i.e. making sure no relevant information is forgotten). Output of the HOMER software are first economic assessments of the MG (calculates NPV, COE, etc). The following components have been registered and used:

1. Load: residential load modelled to be typical for the Roskilde region in January, Pmax = 25kW
2. PV unit on DTU premises, summer profile and winter profile (Pmax = 10 kW)
3. Wind turbine model Gaia, Pmax = 11 kW
4. Vanadium redox battery storage: 190kWh at Pmax = 15kW

In order to challenge the large battery storage, a Tesla wall was modelled as part of the load/ storage profile.
Data about the operation of the MG has been collected by running 4 scenarios of 24 hours each, all in grid connected mode, at the DTU premises during the TA days. The scenarios, which were agreed upon beforehand, were as follows:

1. Initial SoC at minimum, PV unit connected
2. Initial SoC at median value, PV unit connected
3. Initial SoC at minimum, PV unit disconnected
4. Initial SoC at median value, PV unit disconnected

The scenarios were modelled by DTU in Python and operated in the custom software developed by the DTU team. They have run according to plan, in spite of impediments typical for lengthy experiments, which demanded at some points to restart parts of the simulation.

Preliminary assessment of the data shows that:

1. For the geographical and economic conditions of Denmark the use of PV has to be complemented by the use of windmill.
2. As during the research stay the season provided windy nights and unreliable sunshine during the day, it proved technically more plausible that at the start of the experiment (early afternoon) the SoC of the battery be set at minimum. However, in order to prove the economic performance of the system, all four scenarios have to yield positive results.

As the economic data on equipment pieces (prices, year of acquisition, etc) is under way at the moment of this report, the (preliminary) economic conclusions are limited.

Further research involves a TEA analysis of the MG visited at DTU; a broader evaluation of the Danish case based on the academic literature; comparison with other three MGs in Europe. This research will be possible after the completion of all four TA visits foreseen in the project proposal.

1 General Information of the User Project

User Project	
User Project acronym	ECOSMIC
User Project title	Developing and Evaluating an Economic Assessment Framework for Microgrids -- Based on the Concept of Economies of Scope
Main scientific/technical field	Microgrids
Keywords	DER, Microgrids, Techno-economic assessment, comparability

Leader of the User Group	
Name	Herbert Peremans and Steven van Passel
Phone	+ 32 326 54 670
E-mail address	*herbert.peremans@uantwerpen.be*; *steven.vanpassel@uantwerpen.be*
Phone	+32 326 54 895
Nationality	Belgian
Gender	M
Age	
Organization name	Department Engineering Management (ENM), University of Antwerp
Organization address	Prinsstraat 13, 2000 Antwerpen, Belgium
Organization website	*www.uantwerpen.be*
Position in organization	Gewoon Hoogleraar and Hoofddocent, respectively
Activity type and legal status of organization	Higher Education Institution

Members of the User Group	
Name	Iolanda Saviuc
Phone	+32 485 089 139
E-mail address	*iolanda.saviuc@uantwerpen.be*
Nationality	Romanian
Gender	F
Age	32
Organization name	Department Engineering Management (ENM), University of Antwerp
Organization address	Prinsstraat 13, 2000 Antwerpen, Belgium
Organization website	*www.uantwerpen.be*

Position in organization	PhD student
Activity type and legal status of organization	Higher Education Institution

Host Infrastructure	
Name of the Infrastructure/ Installation	SYSLAB and ICL
Location	Technical University of Denmark, Roskilde, Denmark
Web Site	*www.dtu.dk* ; http://www.powerlab.dk/
Access Period	22.01.2018 – 26.01.2018

Research Motivation

As part of my PhD research at the University of Antwerp (BE) supervised by my promotors, Prof. Steven Van Passel and Prof. Herbert Peremans, I am developing a framework for the economic assessment of microgrids (MGs), based on the concept of economies of scope.

In order to achieve that, I propose analyzing the shortcomings of conventional methods, of which the most popular one is the TEA. Until now, MGs are being evaluated case-by-case with the conventional tools of techno-economic analysis (TEA), such as net present value NPV, internal rate of return IRR, etc – whereas a conceptually based framework would be more broadly applicable and would provide a new benchmark for comparability.

The output of a TEA uses CapEx, OpEx and revenues to provide metrics such as: payback period PBP, net present value NPV, internal rate of return IRR, minimum selling price MSP. The probabilistic distribution of these indicators together with the sensitivity analyses, provide insight on the impact of variable MG configurations, and they constitute the main rationale of my application.

This project will perform, via TA with ERIGrid, a series of TEAs on various MG configurations. We hereby aim at a broad range of technology mixes, MG sizes, operating conditions etc. to derive reliable estimates for the parameters used in the general conceptual framework

1.1 Objectives

The TA project of ERIGrid provides the opportunity to a) assess multiple scenarios in the same MG location, and b) compare performances of different MGs in similar scenarios. In addition to the economic data my project will have to take into account specifics of the respective country's energy policy, as it has direct impact on prices of equipment, electricity, CO2.
The input data for the TEA (equipment, quantities, output prices), would be collected by means of interviews and surveys at the respective facilities and by observation of different operation scenarios (i.e. different loads/ load profiles with ongoing experiments, etc.).

Expected outcome of the research stay is a TEA report of the respective MGs and the comparison between the results from each facilty. The scientific contribution of the research lies with studying the method in action and is twofold: it is an expansion on currently available assessment methods (by enabling comparisons) and it helps develop a new, conceptual, assessment framework

1.2 Scope

In the case of the first visit at DTU following pieces of equipment were used:

1. Load: residential load modelled to be typical for the Roskilde region in January, Pmax = 25kW
2. PV unit on DTU premises, summer profile and winter profile (Pmax = 10 kW)
3. Wind turbine model Gaia, Pmax = 11 kW
4. Vanadium redox battery storage: 190kWh at Pmax = 15kW

In order to challenge the large battery storage, a Tesla wall was modelled as part of the load/ storage profile.

Data about the operation of the MG has been collected by running 4 scenarios of 24 hours each, all in island mode, at the DTU premises. The scenarios, which were agreed upon beforehand, were as follows:

1. Initial SoC at minimum, PV unit connected
2. Initial SoC at median value, PV unit connected
3. Initial SoC at minimum, PV unit disconnected
4. Initial SoC at median value, PV unit disconnected

For each scenario, the power flow to and from the battery was monitored, observed against the wind

energy production, solar energy production, load behaviour and energy exchange with the main grid. Output data of the MG operation consisted of files containing

1. The power flow to and from the battery, as well as the instantaneous SoC
2. Energy exchange with the main grid
3. Energy produced by the windmill ad by the PV unit
4. Energy demanded by the load

.

Economic data that was submitted for recording and referred to

1. Equipment: model, brand, year of acquisition, price of acquisition (without VAT and disregarding any discounts)
2. Fuel price
3. Electricity price at the main grid, as well as the components of the electricity price

The economic information on the equipment is due to be provided by email.

2 State-of-the-Art

Economic and techno-economic assessment of MGs has received significant attention in the academic research of the past decade. A literature survey conducted in ScienceDirect and IEEE about TEA of MGs reveals ca. 100 journal articles and conference papers published between 2008 and 2017 (none existing before 2008). Most of these works focus on either the TEA of adding/changing a component in an existing MG – an ESS (Kaldellis, 2007) or a biogas engine (Sigarchian et al., 2015) – or the use TEA for solving the problem of MG sizing in the planning stage (Kobayakawa and Kandpal, 2014; Mohammadi, Hosseinian and Gharehpetian, 2012).

Another characteristic which the vast majority of the papers have in common is that they focus on one case study, presenting reports such as “Feasibility study of renewable energy-based microgrid system in Somaliland's urban centers” (Abdilahi et al., 2014). While this approach delivers valuable insight into a selected local landscape and exemplifies the use of the method, it stops short of making comparisons possible between different settings /configurations/countries. This has to do inherently with the specifics of a TEA metrics and the limitation to case-by-case evaluation. To the best of our knowledge, a comparison between indicators in different scenarios/different countries/different sizes is yet to be carried out.

Other notable approaches in economic assessment of MGs aim at the optimization of operation costs alone. For example, shared storage drives cost advantage of MGs (Lee, Shaw, and Modi, 2014), whereas even simple additions to passively using storage are able to generate benefits under electricity price uncertainty (Milis and Peremans, 2015). Operation scenarios and the decision/timing of electricity selling to the main grid are subject to optimization, and each of them captures one variable that can drive comparisons between MGs.

3 Executed Tests and Experiments

The four scenarios for the 24–hour tests conducted at the DTU premises were agreed upon beforehand as follows:

1. Initial SoC at minimum, PV unit connected
2. Initial SoC at median value, PV unit connected
3. Initial SoC at minimum, PV unit disconnected
4. Initial SoC at median value, PV unit disconnected

Overall, these scenarios make use of the same physical and simulated power components setup and they vary in terms of the selected control parameters (initial SoC and the inclusion of the PV unit).

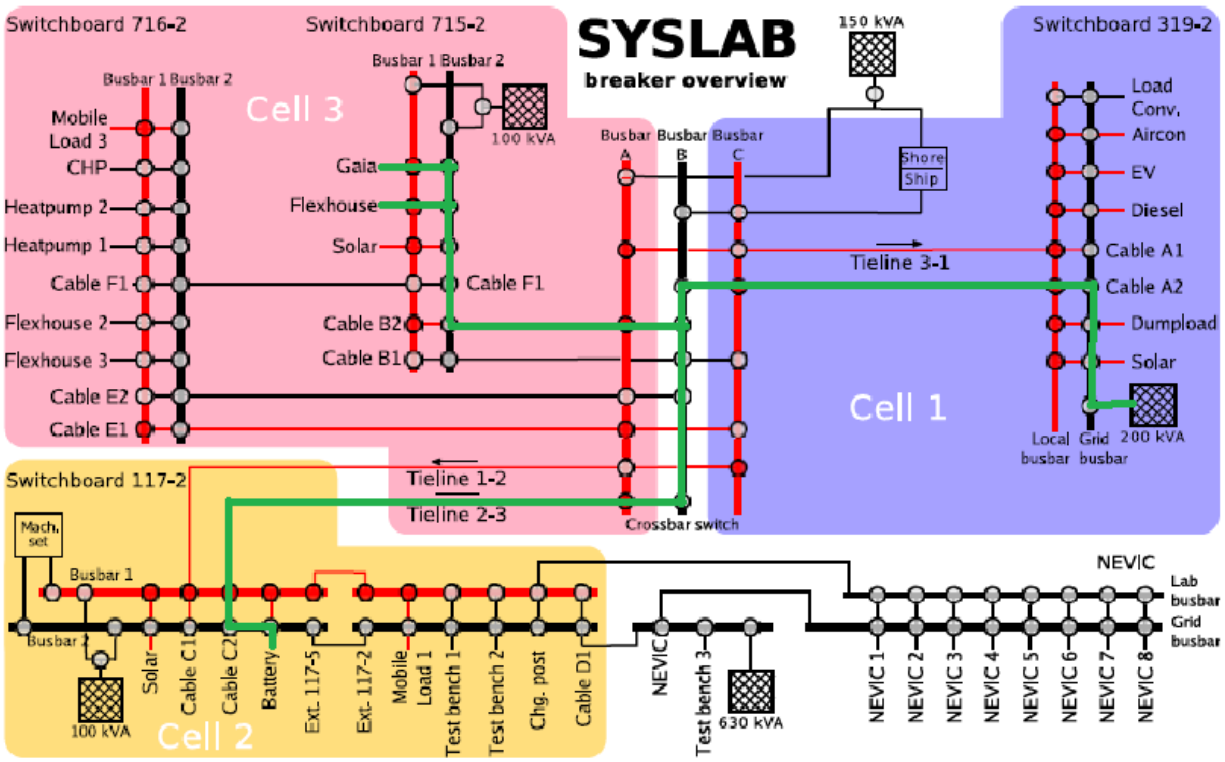

Figure 1: Components available at DTU premises vs components used (connected by green lines)

3.1 Test Plan

Interest of the research team consists in a typical day-to-day operation of a MG, as close to real-life conditions as possible, so as to enable relevant economic conclusions. Therefore the requirements for the tests were

1. 24h-long loops of operation
2. Residential load profile
3. Grid-connected mode

To this end, scenarios described above were specified by the modification of the proper parameters. Thus, during my stay the execution of the tests was commenced from the first day, while during the execution an on-line assessment of results was done in order to spot potential issues in the models used or apply some improvements to the procedure..

3.2 Standards, Procedures, and Methodology

DTU experts have employed the standards and operations procedures that are used at the facility. The operation method of the MG was primarily driven by safety precautions which have been managed entirely by the side of DTU.

3.3 Test Set-up(s)

The objective of the tests was to run 24h-loops in a simple set-up:
Residential load in Roskilde environment to be met by a PV unit, a wind generator and a storage unit in grid-connected mode.
The operation strategy was to meet the load with and without the PV generation as follows:

1. Supposing the beginning of the day of the experiment the battery was depleted (SoC at minimum), the load was met by either production from wind (and, if applicable, sun), or by buying electricity from the main grid.
2. Given that the 24-loops of the experiments at the premises would effectively start around noon/ early afternoon, another interesting set-up involved starting with the SoC at a median value, which was decided in consensus to be set at 50%.

3.4 Data Management and Processing

Experimental output data was recorded in text format (*.csv) and shared via email for post-processing. Economic data will be recorded in HOMER and in a descriptive log file to allow comments and notes.

Results and Conclusions

Results of the test were a descriptive set of data with the recorded behaviour of the battery storage under the four scenarios. It is now possible to account for each time step in the four 24h-loops and identify the proportion of each energy source in meeting the load.

Preliminary assessment of the data shows that:

1. For the geographical and economic conditions of Denmark the use of PV has to be complemented by the use of windmill.
2. As during the research stay the season provided windy nights and unreliable sunshine during the day, it proved technically more plausible that at the start of the experiment (early afternoon) the SoC of the battery be set at minimum. However, in order to prove the economic performance of the system, all four scenarios have to yield positive results.

As the economic data on equipment pieces (prices, year of acquisition, etc) is under way at the moment of this report, the (preliminary) economic conclusions are limited.

Further research involves a TEA analysis of the MG visited at DTU; a broader evaluation of the Danish case based on the academic literature; comparison with other three MGs in Europe. This research will be possible after the completion of all four TA visits foreseen in the project proposal

4 Open Issues and Suggestions for Improvements

The scenarios have run according to plan.
However, by correlating the order in which the four scenarios were implemented with the weather forecast, it would have been possible to assign the scenarios including the PV unit with the sunnier days of the week 22-26 Jan. Incidentally, during the TA week the scenarios employing the PV unit have run during the less sunny days. The argument for not adapting the order of execution was that in real life (which these scenarios aim to emulate) the system has to perform economically even under inauspicious weather conditions.

5 Dissemination Planning

User Group is considering publishing these results in open-access journals such as Energies and to disseminate them at academic workshops and conferences.
The results of this work will also be used in the courses taught on ‘Energy economics’ and 'Electricity economics’ at the Applied Economics faculty of Universiteit Antwerpen.
Individual dissemination methods can include individual e-mails, blogs, newsletters, policy briefs

6 References

Abdilahi, A. M., Yatim, A. H. M., Mustafa, M. W., Khalaf, O. T., Shumran, A. F. and Nor, F. M. (2014): “Feasibility study of renewable energy-based microgrid system in Somaliland's urban centers”, Renewable and Sustainable Energy Reviews 40: 1048–59.

Kaldellis, J. K., Zafirakis, D., and Kavadias, K. (2007): „Techno-economic comparison of energy storage systems for island autonomous electrical networks“, Renewable and Sustainable Energy Reviews 13: 378-92

Kobayakawa, K. and Kandpal, T. C. (2014): “A techno-economic optimization of decentralized renewable energy systems: Trade-off between financial viability and affordability—A case study of rural India”, Energy for Sustainable Development 23: 92–98.

Lee, M., Shaw, G. C., and Modi, V. (2014): “Battery Storage: Comparing Shared to Individually Owned Storage Given Rural Demand Roles of a Cluster of Customers", IEEE 2014 Global Humanitarian Technology Conference, Seattle: 200-06.

Milis, K. and Peremans, H. (2015): “Economical Optimization Of Microgrids: A Non-Causal Model", ASME 2015, 9th International Conference on Energy Sustainability, ES2015, San Diego, California

Mohammadi, M., Hosseinian, S. H., and Gharehpetian, G. B. (2012): “GA-based optimal sizing of microgrid and DG units under pool and hybrid electricity markets”, Electrical Power and Energy Systems 35: 83-92.

Sigarichan, S. G., Paleta, R., Malmquist, A. and Pina, A. (2015): “Feasibility study of using a biogas engine as backup in a decentralized hybrid (PV/wind/battery) power generation system e Case study Kenya”, Energy 90: 1830-41.

European Research Infrastructure supporting Smart Grid Systems Technology Development, Validation and Roll Out

Technical Report TA User Project

ECOSMIC, pt 4/4

Grant Agreement No:	**654113**
Funding Instrument:	**Research and Innovation Actions (RIA) – Integrating Activity (IA)**
Funded under:	**INFRAIA-1-2014/2015: Integrating and opening existing national and regional research infrastructures of European interest**
Starting date of project:	**01.11.2015**
Project Duration:	**54 month**

Contractual delivery date:	**Mar 2018**
Actual delivery date:	**9 Mar 2018**
Name of lead beneficiary for this deliverable:	**Herbert Peremans and Steven van Passel, Univeristy of Antwerp, Belgium**
Deliverable Type:	**Other (O)**
Security Class:	**Confidential, only for members of the consortium (including the Commission Services) (CO)**
Revision / Status:	**draft**

Project co-funded by the European Commission within the H2020 Programme (2014-2020)

Document Information

Document Version: 1

Revision / Status: draft

All Authors/Partners Iolanda Saviuc

Distribution List VTT

Document History

Revision	Content / Changes	Resp. Partner	Date
[Rev. No]	[Short description of document changes]	[Partner Short Name]	DD.MM.YY
[Rev. No]	[Short description of document changes]	[Partner Short Name]	DD.MM.YY
[Rev. No]	[Short description of document changes]	[Partner Short Name]	DD.MM.YY

Document Approval

Final Approval	Name	Resp. Partner	Date
[Review Task Level]	[Given Name + Name]	[Partner Short Name]	DD.MM.YY
[Review WP Level]	[Given Name + Name]	[Partner Short Name]	DD.MM.YY
[Review Steering Com. Level]	[Given Name + Name]	[Partner Short Name]	DD.MM.YY

Disclaimer

Copyright Notice

Table of contents

Abbreviations

CapEx	Capital Expenditures
CHP	Combined Heat and Power
COE	Cost of Energy
DER	Distributed Energy Resource
ECOSMIC	Economic Assessment of Microgrids
GHI	Global Horizontal Irradiance
IRR	Internal Rate of Return
MG	Microgrid
MSP	Minimum Selling Price
NPC	Net Present Cost
NPV	Net Present Value
OpEx	Operational Expenditures
PBP	Payback Period
SoC	State of Charge
TA	Trans-national Access
TEA	Techno-Economic Analysis
UA	University of Antwerp
VTT	Technical Research Centre of Finland Ltd

Executive Summary

The TA visit of ECOSMIC representative Iolanda Saviuc at VTT took place between the 5th and the 9th of February 2018. The visit had been prepared during the weeks before traveling via email and document exchange as well as two web conferences between VTT and ECOSMIC representatives.

Objective of the TA visit was designed to be twofold. First, collecting economic data about the components of the experimental MG on the VTT premises; second, performing a series of experiments and collecting output data on the proportion of energy sources that meet the load.

The MG components were presented in a tour of the premises upon arrival on the first day. All the pieces of information learned during the tour were logged into a detailed descriptive table, and then built into a draft HOMER model of the MG. The model was then perfected through a targeted interview with the VTT representative Klaus Känsälä. Filling out the required fields in the HOMER software for a valid model ensured indirectly a comprehensive collection of economic data (i.e. making sure no relevant information is forgotten). Output of the HOMER software are first economic assessments of the MG (calculates NPV, COE, etc). The following components have been registered and used:

1. Load: residential load as provided by the VTT smart apartment occupied by the ECOSMIC representative during the days of TA access
2. PV unit, 7.2 kW capacity
3. Windmill, 5.5 kW capacity
4. Leady-acid battery storage: 58 kWh
5. Battery inverter: 10 kW
6. An electric vehicle: 6.5 kW
7. Connection to the main grid

Data about the operation of the MG has been collected by running 4 scenarios of 24h each, all in grid-connected mode, at the VTT premises. The operation scenarios were based on the following proposal:

	Unmet load	**Excess electricity**
Scenario #1 (benchmark)	Draw electricity from storage. In case storage depleted, draw from main grid. *>self-sufficiency first*	Store energy in the battery. In case battery full, inject the electricity into the main grid.
Scenario #2	If within peak hours, draw energy from storage. When depleted, buy from grid. If outside peak hours, draw from storage only until optimum* charged, then buy from grid. *>save the stored energy for later, to avoid buying during peak hours*	Store energy in the battery. In case battery full, inject the electricity into the main grid. *>the idea is not primarily to maximize revenue, but to use as much renewable energy as possible*
Scenario #3	If within peak hours, draw energy from storage. When depleted, buy from grid. If outside peak hours, draw from storage only until optimum*, then buy from grid. *>save the stored energy for later, to avoid buying during peak hours*	If within peak hours (i.e. selling electricity to the main grid is profitable) then inject into the main grid. If outside of peak hours, store energy in the battery until full. *>maximize revenue*
Scenario #4 Use the EV as secondary load when charging and NOT for supply	Draw electricity from storage. In case storage depleted, decide: If within peak hours, disconnect the EV and draw from main grid. If outside peak hours, draw from main grid for both loads.	Store energy in battery. If battery full, store energy in EV. If EV full/ not at home, inject into the main grid.

The scenarios were adapted, modelled and operated by VTT and have run according to plan, in spite

of impediments typical for lengthy experiments, which demanded at some points to restart parts of the simulation.

Preliminary assessment of the data shows that:

1. This particular MG would be profitable in a real-life environment (NPC negative)
2. For the geographical and economic conditions of Finland the use of PV with storage units is technically reliable even in winter conditions with windstill.

Further research involves a TEA analysis of the MG visited at VTT; a broader evaluation of the Finnish case based on the academic literature; comparison with other three MGs in Europe. This research will be possible after the completion of all four TA visits foreseen in the project proposal.

Figure 1: Interior of the smart home of VTT used for the experiment

General Information of the User Project

User Project	
User Project acronym	ECOSMIC
User Project title	Developing and Evaluating an Economic Assessment Framework for Microgrids -- Based on the Concept of Economies of Scope
Main scientific/technical field	Microgrids
Keywords	DER, Microgrids, Techno-economic assessment, comparability

Leader of the User Group	
Name	Herbert Peremans and Steven van Passel
Phone	+ 32 326 54 670
E-mail address	herbert.peremans@uantwerpen.be; steven.vanpassel@uantwerpen.be
Phone	+32 326 54 895
Nationality	Belgian
Gender	M
Age	
Organization name	Department Engineering Management (ENM), University of Antwerp
Organization address	Prinsstraat 13, 2000 Antwerpen, Belgium
Organization website	www.uantwerpen.be
Position in organization	Gewoon Hoogleraar and Hoofddocent, respectively
Activity type and legal status of organization	Higher Education Institution

Members of the User Group	
Name	Iolanda Saviuc
Phone	+32 485 089 139
E-mail address	iolanda.saviuc@uantwerpen.be
Nationality	Romanian
Gender	F
Age	32
Organization name	Department Engineering Management (ENM), University of Antwerp
Organization address	Prinsstraat 13, 2000 Antwerpen, Belgium
Organization website	www.uantwerpen.be

Position in organization	PhD student
Activity type and legal status of organization	Higher Education Institution

Host Infrastructure	
Name of the Infrastructure/ Installation	Oulu Smart Grid Laboratory (SG-Oulu)
Location	VTT – Oulu, Finland
Web Site	www.vtt.fi
Access Period	05.02.2018 – 09.02.2018

Research Motivation

As part of my PhD research at the University of Antwerp (BE) supervised by my promotors, Prof. Steven Van Passel and Prof. Herbert Peremans, I am developing a framework for the economic assessment of microgrids (MGs), based on the concept of economies of scope.

In order to achieve that, I propose analyzing the shortcomings of conventional methods, of which the most popular one is the TEA. Until now, MGs are being evaluated case-by-case with the conventional tools of techno-economic analysis (TEA), such as net present value NPV, internal rate of return IRR, etc – whereas a conceptually based framework would be more broadly applicable and would provide a new benchmark for comparability.

The output of a TEA uses CapEx, OpEx and revenues to provide metrics such as: payback period PBP, net present value NPV, internal rate of return IRR, minimum selling price MSP. The probabilistic distribution of these indicators together with the sensitivity analyses, provide insight on the impact of variable MG configurations, and they constitute the main rationale of my application.

This project will perform, via TA with ERIGrid, a series of TEAs on various MG configurations. We hereby aim at a broad range of technology mixes, MG sizes, operating conditions etc. to derive reliable estimates for the parameters used in the general conceptual framework

1.1 Objectives

The TA project of ERIGrid provides the opportunity to a) assess multiple scenarios in the same MG location, and b) compare performances of different MGs in similar scenarios. In addition to the economic data my project will have to take into account specifics of the respective country's energy policy, as it has direct impact on prices of equipment, electricity, CO2.
The input data for the TEA (equipment, quantities, output prices), would be collected by means of interviews and surveys at the respective facilities and by observation of different operation scenarios (i.e. different loads/ load profiles with ongoing experiments, etc.).

Expected outcome of the research stay is a TEA report of the respective MG. The scientific contribution of the research lies with studying the method in action and is twofold: it is an expansion on currently available assessment methods (by enabling comparisons) and it helps develop a new, conceptual, assessment framework

1.2 Scope

In the case of the first visit at VTT following pieces of equipment were used:

1. Load: residential load as provided by the VTT smart apartment occupied by the ECOSMIC representative during the days of TA access
2. PV unit, 7.2 kW capacity
3. Windmill, 5.5 kW capacity
4. Leady-acid battery storage: 58 kWh
5. Battery inverter: 10 kW
6. An electric vehicle: 6.5 kW
7. Connection to the main grid

Data about the operation of the MG has been collected by running 4 scenarios of 24h in grid-connected mode at the VTT premises. The operation scenarios were based on the following proposal:

	Unmet load	**Excess electricity**
Scenario #1 (bench-mark)	Draw electricity from storage. In case storage depleted, draw from main grid. *>self-sufficiency first*	Store energy in the battery. In case battery full, inject the electricity into the main grid.
Scenario #2	If within peak hours, draw energy from storage. When depleted, buy from grid. If outside peak hours, draw from storage only until optimum* charged, then buy from grid. *>save the stored energy for later, to avoid buying during peak hours*	Store energy in the battery. In case battery full, inject the electricity into the main grid. *>the idea is not primarily to maximize revenue, but to use as much renewable energy as possible*
Scenario #3	If within peak hours, draw energy from storage. When depleted, buy from grid. If outside peak hours, draw from storage only until optimum*, then buy from grid. *>save the stored energy for later, to avoid buying during peak hours*	If within peak hours (i.e. selling electricity to the main grid is profitable) then inject into the main grid. If outside of peak hours, store energy in the battery until full. *>maximize revenue*
Scenario #4 Use the EV as secondary load when charging and NOT for supply	Draw electricity from storage. In case storage depleted, decide: If within peak hours, disconnect the EV and draw from main grid. If outside peak hours, draw from main grid for both loads.	Store energy in battery. If battery full, store energy in EV. If EV full/ not at home, inject into the main grid.

Output data of the MG operation consisted of files containing

1. The power flow to and from the battery
2. The power output of the PV unit as well as the temperature.

Economic data that was recorded referred to

1. Equipment: model, brand, year of acquisition, price of acquisition (without VAT and disregarding any discounts)
2. Fuel price
3. Electricity price at the main grid in Finland.

2 State-of-the-Art

Economic and techno-economic assessment of MGs has received significant attention in the academic research of the past decade. A literature survey conducted in ScienceDirect and IEEE about TEA of MGs reveals ca. 100 journal articles and conference papers published between 2008 and 2017 (none existing before 2008). Most of these works focus on either the TEA of adding/changing a component in an existing MG – an ESS (Kaldellis, 2007) or a biogas engine (Sigarchian et al., 2015) – or the use TEA for solving the problem of MG sizing in the planning stage (Kobayakawa and Kandpal, 2014; Mohammadi, Hosseinian and Gharehpetian, 2012).

Another characteristic which the vast majority of the papers have in common is that they focus on one case study, presenting reports such as “Feasibility study of renewable energy-based microgrid system in Somaliland's urban centers” (Abdilahi et al., 2014). While this approach delivers valuable insight into a selected local landscape and exemplifies the use of the method, it stops short of making comparisons possible between different settings /configurations/countries. This has to do inherently with the specifics of a TEA metrics and the limitation to case-by-case evaluation. To the best of our knowledge, a comparison between indicators in different scenarios/different countries/different sizes is yet to be carried out.

Other notable approaches in economic assessment of MGs aim at the optimization of operation costs alone. For example, shared storage drives cost advantage of MGs (Lee, Shaw, and Modi, 2014), whereas even simple additions to passively using storage are able to generate benefits under electricity price uncertainty (Milis and Peremans, 2015). Operation scenarios and the decision/timing of electricity selling to the main grid are subject to optimization, and each of them captures one variable that can drive comparisons between MGs.

3 Executed Tests and Experiments

The four scenarios were planned to run for 24h each, based on the proposal discussed beforehand, as follows:

	Unmet load	**Excess electricity**
Scenario #1 (bench-mark)	Draw electricity from storage. In case storage depleted, draw from main grid. *>self-sufficiency first*	Store energy in the battery. In case battery full, inject the electricity into the main grid.
Scenario #2	If within peak hours, draw energy from storage. When depleted, buy from grid. If outside peak hours, draw from storage only until optimum* charged, then buy from grid. *>save the stored energy for later, to avoid buying during peak hours*	Store energy in the battery. In case battery full, inject the electricity into the main grid. *>the idea is not primarily to maximize revenue, but to use as much renewable energy as possible*
Scenario #3	If within peak hours, draw energy from storage. When depleted, buy from grid. If outside peak hours, draw from storage only until optimum*, then buy from grid. *>save the stored energy for later, to avoid buying during peak hours*	If within peak hours (i.e. selling electricity to the main grid is profitable) then inject into the main grid. If outside of peak hours, store energy in the battery until full. *>maximize revenue*
Scenario #4 Use the EV as secondary load when charging and NOT for supply	Draw electricity from storage. In case storage depleted, decide: If within peak hours, disconnect the EV and draw from main grid. If outside peak hours, draw from main grid for both loads.	Store energy in battery. If battery full, store energy in EV. If EV full/ not at home, inject into the main grid.

The adaptation of the scenarios aimed to include the constraints regarding the length, the battery discharge rate (see Figure 2).

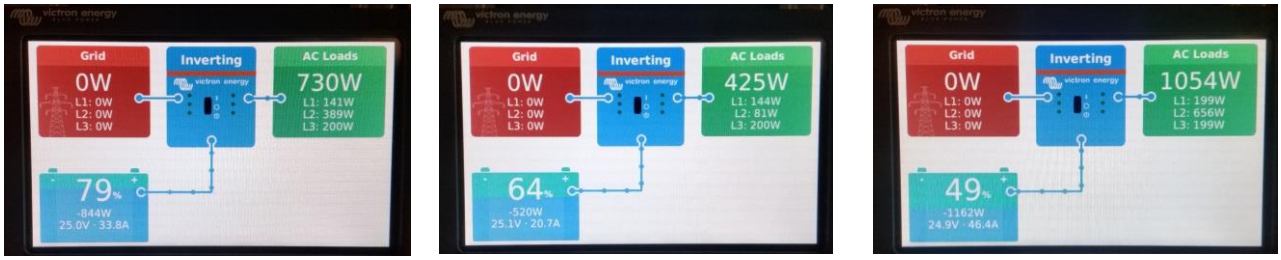

Figure 2: The reading of the battery state of charge during the experiment on 5 February at 13:00, 14:00 and 15:00 (bottom left in each picture)

3.1 Test Plan

Interest of the research team consists in a typical day-to-day operation of a MG, as close to real-life conditions as possible, so as to enable relevant economic conclusions.

To this end, scenarios described above were specified by the modification of the proper parameters. Each scenario was configured prior to the execution of each test. Thus, during my stay the execution of the tests was commenced from the first day, while during the execution an on-line assessment of results was done in order to spot potential issues in the models used or apply some improvements to the procedure due to fast discharge of the storage or sensor reading parameters.

3.2 Standards, Procedures, and Methodology

VTT experts have employed the standards and operations procedures that are used at the facility. The operation method of the MG was primarily driven by safety precautions and, due to the low temperatures in Oulu at the beginning of February, by avoiding the risk of complete discharge of battery during the night, which would lead to the cooling of the apartment.

3.3 Test Set-up(s)

The objective of the tests was to run 24h-loops in a simple set-up, using the following components:

1. Load: residential load as provided by the VTT smart apartment occupied by the ECOS-MIC representative during the days of TA access
2. PV unit, 7.2 kW capacity
3. Windmill, 5.5 kW capacity
4. Leady-acid battery storage: 58 kWh
5. Battery inverter: 10 kW
6. An electric vehicle: 6.5 kW
7. Connection to the main grid

Figure 3: VTT premises with windmill and solar panels on the roof

3.4 Data Management and Processing

Experimental output data was recorded in Excel (*.xls) and shared via email for post-processing. Economic data was recorded in HOMER and in a descriptive log file to allow comments and notes. For the modelling of the MG in HOMER, VTT experts have also provided feedback.

Results and Conclusions

Results of the test were a descriptive set of data with the recorded behaviour of the battery storage under the four scenarios. It is now possible to account for each time step in the four 24h-loops and identify the corresponding load size and the sources that have met the load, as well as the proportion.

Preliminary assessment of the data shows that:

1. This particular MG would be profitable in a real-life environment (NPC negative)
2. For the geographical and economic conditions of Finland the use of PV with storage units is technically reliable even in winter conditions with windstill

Further research involves a TEA analysis of the MG visited at VTT; a broader evaluation of the Finnish case based on the academic literature; comparison with other three MGs in Europe. This research will be possible after the completion of all four TA visits foreseen in the project proposal.

4 Open Issues and Suggestions for Improvements

The scenarios have run according to plan, in spite of impediments typical for lengthy experiments, which demanded at some points to restart parts of the simulation.

5 Dissemination Planning

User Group is considering publishing these results in open-access journals such as Energies and to disseminate them at academic workshops and conferences.
The results of this work will also be used in the courses taught on ‘Energy economics’ and 'Electricity economics’ at the Applied Economics faculty of Universiteit Antwerpen.
Individual dissemination methods can include individual e-mails, blogs, newsletters, policy briefs

6 References

Abdilahi, A. M., Yatim, A. H. M., Mustafa, M. W., Khalaf, O. T., Shumran, A. F. and Nor, F. M. (2014): “Feasibility study of renewable energy-based microgrid system in Somaliland's urban centers”, Renewable and Sustainable Energy Reviews 40: 1048–59.

Kaldellis, J. K., Zafirakis, D., and Kavadias, K. (2007): „Techno-economic comparison of energy storage systems for island autonomous electrical networks“, Renewable and Sustainable Energy Reviews 13: 378-92

Kobayakawa, K. and Kandpal, T. C. (2014): “A techno-economic optimization of decentralized renewable energy systems: Trade-off between financial viability and affordability—A case study of rural India”, Energy for Sustainable Development 23: 92–98.

Lee, M., Shaw, G. C., and Modi, V. (2014): “Battery Storage: Comparing Shared to Individually Owned Storage Given Rural Demand Roles of a Cluster of Customers", IEEE 2014 Global Humanitarian Technology Conference, Seattle: 200-06.

Milis, K. and Peremans, H. (2015): “Economical Optimization Of Microgrids: A Non-Causal Model", ASME 2015, 9th International Conference on Energy Sustainability, ES2015, San Diego, California

Mohammadi, M., Hosseinian, S. H., and Gharehpetian, G. B. (2012): “GA-based optimal sizing of microgrid and DG units under pool and hybrid electricity markets”, Electrical Power and Energy Systems 35: 83-92.

Sigarichan, S. G., Paleta, R., Malmquist, A. and Pina, A. (2015): “Feasibility study of using a biogas engine as backup in a decentralized hybrid (PV/wind/battery) power generation system e Case study Kenya”, Energy 90: 1830-41.